ADAMAS UNIVERSITY

SCHOOL OF ENGINEERING & TECHNOLOGY

B.Tech. Mechanical Engineering
(Regular)-MEE3401

Course Structure & Syllabus

(2026-27)

ADAMAS UNIVERSITY
SCHOOL OF ENGINEERING & TECHNOLOGY
DEPARTMENT OF MECHANICAL ENGINEERING
B. Tech (Mechanical Engineering)
Course Structure

Course Structure for B.Tech (Mechanical Engineering)-MEE3401 Program

FIRST YEAR

SEMESTER I								
S. No	**Type**	**Course Code**	**Course Title**	**L**	**T**	**P**	**Contact Hrs/wk**	**Credits**
1	Theory (BSC)	MTH11501	Engineering Mathematics-I	3	1	0	4	4
2	Hybrid (ESC)	PHY13201	Applied Science	2	0	2	4	3
	Theory (ESC)	EVS11112	Environmental Science	3	0	0	3	3
3	Theory (ESC)	CSE11001	Introduction to Programming	2	0	0	2	2
		GEE11001	Electrical and Electronics Technology	2	0	0	2	2
4	Theory (HSSM)	ENG11053	English Communication	1	0	2	3	2
	Theory	CSE11082	Principles and Applications of AI	2	0	0	2	
5	Theory (BSC)	BIT11003	Life Sciences	2	0	0	2	2
6	Theory (Mandatory)	DGS11002	Design Thinking & Prototyping	1	0	2	3	3
	Theory (ESC)	MEE11002	Engineering Mechanics	2	1	0	3	3
7	Practical (ESC)	CSE12002	Programming Lab	0	0	4	4	2
		GEE12002	Electrical and Electronics Technology Lab	0	0	4	4	2
8	Practical (ESC)	CEE12001	Engineering Drawing and CAD	0	0	4	4	2
		MEE12001	Engineering Workshop	0	0	4	4	
			Total	**11/14**	**1/2**	**14/8**	**26/24**	**20**

SEMESTER II								
S. No	**Type**	**Course Code**	**Course Title**	**L**	**T**	**P**	**Contact Hrs/wk**	**Credits**
1.	Theory (BSC)	MTH11502	Engineering Mathematics– II	3	1	0	4	4
2.	Theory (ESC)	MEE11002	Engineering Mechanics	2	1	0	3	3
	Theory (Mandatory)	DGS11002	Design Thinking & Prototyping	1	0	2	3	3
3.	Theory (ESC)	EVS11112	Environmental Science	3	0	0	3	3
	Hybrid (ESC)	PHY13201	Applied Science	2	0	2	4	3
4.	Theory (ESC)	GEE11001	Electrical and Electronics Technology	2	1	0	3	3
		CSE11001	Introduction to Programming	2	0	0	2	2
5.	Theory	CSE11082	Principles and Applications of AI	2	0	0	2	2
	Theory (HSSM)	ENG11053	English Communication	1	0	2	3	
6.	Theory (Mandatory)	EIC11001	Venture Ideation	2	0	0	2	2
7.	Practical (ESC)	GEE12002	Electrical and Electronics Technology Lab	0	0	2	2	1
		CSE12002	Programming Lab	0	0	4	4	2
8	Practical (ESC)	MEE12001	Engineering Workshop	0	0	4	4	2
		CEE12001	Engineering Drawing and CAD	0	0	4	4	
9	Theory (Mandatory)	CLL11101	Soft Skills and Aptitude-I	1	0	0	1	1
Total				**15/11**	**3/2**	**6/14**	**24/26**	**21**

SECOND YEAR

SEMESTER III								
S. No	**Type**	**Course Code**	**Course Title**	**L**	**T**	**P**	**Contact Hrs/wk**	**Credits**
1	Theory (BSC)	**MTH11529**	Engineering Mathematics – III A	3	1	0	4	4
2	Theory (ESC)	**MEE11003**	Material Engineering & Composites	3	0	0	3	3
3	Theory (PCC)	**MEE11009**	Prof. Core – I Manufacturing Technology I	3	1	0	4	4
4	Theory (PCC)	**MEE11005**	Prof. Core – II Fluid Mechanics	3	1	0	4	4
5	Theory (PCC)	**MEE11006**	Prof. Core – III Engineering Thermodynamics	3	0	0	3	3
6	Practical (Mandatory)	**IDP14001**	Interdisciplinary Project	0	0	6	6	3
7	Practical (PCC)	**MEE12013**	Prof. Core Lab – I Manufacturing Technology I Lab	0	0	2	2	1
8	Practical (PCC)	**MEE12025**	Prof. Core Lab – II Machine Drawing with CAD	0	0	2	2	1
9	Practical (BSC)	**MTH12531**	Numerical Techniques Lab	0	0	2	2	1
10	Practical (Mandatory)	**SOC14100**	# Community Service	-	-	-	-	1
11	Theory (Mandatory)	CLL11102	Soft Skills and Aptitude-II	1	0	0	1	1
			Total	**16**	**3**	**12**	**31**	**26**

 # Community Service will be taken up during the summer vacation of II Semester and evaluated in III Semester.

SEMESTER-IV								
S. No	**Type**	**Course Code**	**Subject Name**	**L**	**T**	**P**	**Contact Hrs/wk**	**Credits**
1.	Theory (PCC)	**MEE11004**	Prof. Core – IV Mechanics of Solids	3	1	0	4	4
2.	Theory (PCC)	**MEE11015**	Prof. Core – V Manufacturing Technology II	3	0	0	3	3
3.	Theory (PCC)	**MEE11014**	Prof. Core – VI Thermal Engineering	3	1	0	4	4
4.	Theory (PCC)	**MEE11027**	Prof. Core – VII Metrology & Measurement	3	0	0	3	3
5.	Theory (PCC)	**MEE11010**	Prof. Core – VII Mechanisms & Machine	3	0	0	3	3
6.	Theory (Mandatory)	**PSG11021**	Human Values, Ethics and Psychology	2	0	0	2	2
7.	Practical (PCC)	**MEE12007**	Prof. Core Lab – III Material Testing Lab	0	0	2	2	1
8.	Practical (PCC)	**MEE12035**	Prof. Core Lab – IV Metrology & Measurement Lab	0	0	2	2	1
9.	Practical (Sessional) (PCC)	**MEE12036**	Prof. Core Lab – V Thermal Engineering Lab	0	0	2	2	1
10.	Theory (Mandatory)	CLL11103	Soft Skills and Aptitude-III	1	0	0	1	1
			Total	**15**	**2**	**6**	**23**	**23**

THIRD YEAR

SEMESTER –V								
S. No	**Type**	**Course Code**	**Subject Name**	**L**	**T**	**P**	**Contact Hrs /week**	**Credits**
1.	Theory (PCC)	**MEE11026**	Prof. Core – VIII Heat Transfer	3	1	0	4	4
2.	Theory (PCC)	**MEE11010**	Prof. Core – IX Dynamics of machines	3	0	0	3	3
3.	Theory (PCC)	**MEE11008**	Prof. Core – X Fluid Machinery	3	1	0	4	4
4.	Theory (PEC)	**MEE11056** **MEE11018**	**Prof. Elective – I** 1. Agricultural Engineering 1. Computer Integrated Manufacturing 1. Generative Design	3	0	0	3	3
5.	Theory (PEC)	**MEE11048** **MEE11038**	**Prof. Elective – II** 2. Power Plant Engineering 2. Additive Manufacturing 2. Smart materials	3	0	0	3	3
6.	Practical (PCC)	**MEE12034**	Prof. Core Lab – VI Heat Transfer Lab	0	0	2	2	1
7.	Practical (PCC)	**MEE12012**	Prof. Core Lab – VII Fluid mechanics & Hydraulics Lab	0	0	2	2	1
8.	Practical (PCC)	**MEE12023**	Prof. Core Lab – VIII Manufacturing Technology - II Lab	0	0	2	2	1
9.	Practical (PSI)	**MEE15062**	Technical Seminar	0	0	2	2	1
10.	Theory (Mandatory)	CLL11104	Soft Skills and Aptitude-IV	1	0	0	1	1
			Total	**16**	**2**	**8**	**26**	**22**

SEMESTER –VI								
S. No	**Type**	**Course Code**	**Subject Name**	**L**	**T**	**P**	**Contact Hrs/wk**	**Credits**
1.	Theory (PCC)		Prof. Core – XI Production Planning and controls	3	0	0	3	3
2.	Theory (PCC)	**MEE11011**	Design of Mechanical Systems	3	0	0	3	3
3.	Theory (PCC)	**MEE11028**	Prof. Core – XII IC Engines & Gas Turbines	3	1	0	4	4
4.	Theory (PEC)	MEE11054/ **MEE11062/** **MEE11036**	**Prof. Elective – III** Computational Fluid Dynamics/ Data Science & AI in Mechanical Engineering/ Mechanical Vibration and Control	3	0	0	3	3
5.	Theory (PEC)	**MEE11063/** **/MEE11030**	**Prof. Elective – IV** Refrigeration and Air Conditioning/ Industrial Automation/ Computer Aided Design & Simulation	3	0	0	3	3
6.	Theory (OEC)		**Open Elective – I**	3	0	0	3	3
7.	Theory (HSSM)	**ECO11505**	Economics for Engineers	3	0	0	3	3
8.	Practical (PCC)	**MEE12024**	Prof. Core Lab – IX Mechanisms & Machines Lab	0	0	2	2	1
9.	Practical (PEC)	**MEE12031**	**Prof. Elective-IV Lab** Refrigeration and Air Conditioning Lab/ Industrial Automation Lab/ Computer Aided Design & Simulation Lab	0	0	2	2	1
10.	Practical (PCC)	**MEE12029**	Prof. Core Lab – XII Internal Combustion Engines Lab	0	0	0	2	1
11.	Theory (Mandatory)	CLL11105	Soft Skills and Aptitude-V	1	0	0	1	1
			Total	**22**	**1**	**4**	**30**	**27**

FOURTH YEAR

	SEMESTER-VII							
S. No	**Type**	**Course CODE**	**Subject Name**	**L**	**T**	**P**	**Contact Hrs/week**	**Credits**
1.	Theory (HSSM)	**MGT11402**	Industrial Management	3	0	0	3	3
2.	Theory (PCC)	**MEE11069**	Prof. Core – XIII Automobile Engineering Automatic Controls	3	1	0	4	4
3.	Theory (PEC)	**MEE11066/ MEE11037/ MEE11040**	**Prof. Elective – V** Alternative Fuels/ Robotics/ Biomedical Design	3	0	0	3	3
4.	Theory (OEC)		**Open Elective – II**	3	0	0	3	3
5.	Theory (OEC)		**Open Elective – III**	3	0	0	3	3
7.	Practical (PEC)	**MEE12055/**	**Prof. Elective Lab** Computational Fluid Dynamics Lab/ Data Science & AI Lab/ Vibration & Control Lab	0	0	2	2	1
8.	Practical (PCC)	MEE14056	Summer Internship#	0	0	4	4	2
9.	Practical (PCC)	MEE14057	Minor Project	0	0	3	3	3
10.	Theory (Mandatory)	CLL11106	Soft Skills and Aptitude-6	1	0	0	1	1
			Total	**16**	**1**	**9**	**26**	**23**

 # Summer Internship for 30 days will be taken at the end of 6th semester and will be evaluated in the 7th semester.

Semester-VIII								
S. No	**Type**	**Course Code**	**Subject Name**	**L**	**T**	**P**	**Contact Hrs/week**	**Credits**
1.	Practical (PCC)	**MEE14060**	Industry Work Experience / SIRE* / Major Project	0	0	12	12	6
2.	Practical (PCC)	**MEE15061**	Comprehensive Viva Voce	------			------	2
			Total	**0**	**0**	**12**	**12**	**8**

***SIRE: Scientific Investigation & Research Experience**

Total Credits Distribution Semester wise: (B. Tech)

Semester	**I**	**II**	**III**	**IV**	**V**	**VI**	**VII**	**VIII**	**Total Credits**
Credits	**20**	**21**	**26**	**23**	**22**	**27**	**23**	**08**	**170**

Credit Distribution (Excluding Specialization)

Sl. No.	**Category**	**Breakup of Credits**	**AU Credit Distribution %**	**AICTE Credit Distribution %**
1.	**Humanities, Social Sciences & Management Courses (HSSM)**	**11**	**07**	**07**
2.	**Basic Science Courses (BSC)**	**20**	**13**	**16**
3.	**Engineering Science Courses (ESC)**	**26**	**16**	**15**
4.	**Professional Core Courses (PCC)**	**65**	**41**	**40**
5.	**Professional Elective Courses (PEC)**	**17**	**11**	**11**
6.	**Open Elective Courses (OEC)**	**09**	**06**	**11**
7.	**Mandatory Course (Mandatory)**	**10**	**06**	**00**
	Total Credits	**158**	**100**	**100**

Open elective offered by ME Dept.

	Micro Electro-Mechanical Systems (MEMS)
MEE11072	Robotics and Automation
MEE11073	Computer aided simulation and analysis
	Energy Conversion and Power Plant Technologies
	Wearable Robotics

MTH11501	Engineering Mathematics-I	L	T	P	C
Version 1.0		3	1	0	4
Pre-requisites/Exposure	12th level Mathematics				
Co-requisites	--				

Course Objectives

1. To give deep knowledge about concepts of differential calculus and enable students to apply these topics in real life problems
2. To give the students a perspective to learn integral calculus and its importance in advanced study in engineering science
3. To help the student to understand the basic concepts of matrix theory with its uses in engineering science
4. To give emphasis about concepts of Eigen value and Eigen vector, vector space and linear transformation and enable students to apply these topics for analysing engineering problems
5. To help the student to understand basic concept of abstract and vector algebra with its uses in engineering science

Course Outcomes

On completion of this course, the students will be able to

CO1: Define fundamental concepts related to Calculus, Linear Algebra, and Vector Algebra
CO2: Explain the mathematical principles and theorems associated with Calculus and linear algebra
CO3: Apply various techniques from calculus, vector, and linear algebra to solve problems
CO4: Analyze and interpret mathematical results from the domain of study
CO5: Critically evaluate advanced mathematical problems and theorems
CO6: Create mathematical models for complex real-world problems

Catalog Description

For engineering course, Mathematics is the backbone. Students will be having good engineering skills if their idea for Mathematics is clear. In this course the focus will be to learn Mathematics in depth which will motivate students to grow their thinking ability for Engineering also. By knowing the theory student will be able to apply that successfully to all kind of problems of Engineering and science. Class participation is a fundamental aspect of this course. Students will be encouraged to actively take part in all group activities (Problem solving, presentation etc.).

Course Content

Unit- I **[20]**

Group Theory: Review of concept of set theory, Binary operations, group, abelian group, subgroups, necessary and sufficient condition for a subset of group to be a subgroup, ring, field, examples.

Sequences and Series: Sequences and their limits, convergence of series, comparison test, Ratio test, Root test, Absolute and conditional convergence, alternating series, Power series.

Vector Algebra: Scalar and vector fields, Vector product, Scalar triple product and their interpretation, directional derivative, gradient, Curl, divergence.

Unit- II **[16]**

Differential Calculus (Functions of one Variable): Limit, continuity, differentiability of functions of single variable, successive differentiation, Leibnitz's theorem, Rolle's Theorem, Cauchy's mean value theorem, Taylor's and Maclaurin's theorems with remainders, indeterminate forms, concavity and convexity of a curve, points of inflexion, asymptotes and curvature.

Differential Calculus (Functions of several variables): Limit, continuity, Differentiability of functions of several variables, partial derivatives and their geometrical interpretation, differentials, derivatives of composite and implicit functions, Euler s theorem on homogeneous functions, harmonic functions, maxima and minima of functions of several variables, Lagrange's method of multipliers.

Unit- III **[14]**

Integral Calculus: Fundamental theorem of integral calculus, mean value theorems, evaluation of definite integrals, reduction formulae. Convergence of improper integrals, tests of convergence, Beta and Gamma functions, elementary properties, Differentiation under integral sign, differentiation of integrals with variable limits, Leibnitz rule. Rectification, double and triple integrals, computations of area, surfaces and volumes, change of variables in double integrals, Jacobian's of transformations, integrals dependent on parameters, applications.

Unit-IV **[10]**

Ordinary Differential Equations: First order differential equations, exact, linear and Bernoulli's form, second order differential equations with constant coefficients, method of variation of parameters, general linear differential equations with constant coefficients, Euler's equations, Cauchy-Legendre's equation system of differential equations.

References:

1. ErwynKreyszig : Advanced Engineering Mathematics, John Wiley and Sons
2. B.V. Ramana, Higher Engineering Mathematics Tata McGraw-Hill.
3. B.S.Grewal : Higher Engineering Mathematics, Khanna Publications
4. C B Gupta, S R Singh, Mukesh Kumar: Engineering Mathematics, McGraw Hill Publication.
5. R.K.Jain and S.R.K.Iyengar : Advanced Engineering Mathematics, Narosa Publishing House, 2002

Modes of Evaluation: Quiz/Assignment/ presentation/ extempore/ Written Examination
Examination Scheme:

Components	Class Assessment	End Term Examination
Weightage (%)	50	50

Relationship between the Course Outcomes (COs) and Program Outcomes (POs)

Course Code	Course Name	COs	PO1	PO2	PO3	PO4	PO5	PO6	PO7	PO8	PO9	PO10	PO11	PO12	PSO1	PSO2	PSO3
MTH 11501	Engineering Mathematics-I	CO(MTH 11501).1	3	2	-	-	2	-	-	-	-	-	-	-	-	-	-
		CO(MTH 11501).2	3	2	-	-	2	-	-	-	-	-	-	-	-	-	-
		CO(MTH 11501).3	3	2	-	-	2	-	-	-	-	-	-	-	-	-	-
		CO(MTH 11501).4	3	2	-	-	2	-	-	-	-	-	-	-	-	-	-
		CO(MTH 11501).5	3	2	-	-	2	-	-	-	-	-	-	-	-	-	-
		CO(MTH 11501).6	3	2	-	-	2	-	-	-	-	-	-	-	-	-	-
		CO(MTH 11501)	3	2	-	-	2	-	-	-	-	-	-	-	-	-	-

1=weakly mapped
2= moderately mapped
3=strongly mapped

Model Question Paper

Name:

Enrolment No:

ADAMAS UNIVERSITY
PURSUE EXCELLENCE

Course: MTH11501 – Engineering Mathematics I

Program: B.Tech. (All Programs) **Semester: ODD 2020-21**

Time: 03 hrs. **Max. Marks:40**

Instructions:

Section A is compulsory (each carrying 4 marks); All questions from **Section B** (each carrying 10 marks)**, Any one from Section C** (carrying 8 marks)**.**

Section A

1.	**Find** the solution of the following differential equation after reducing it to a homogeneous differential equation $(x+2)^2\frac{d^2y}{dx^2}-4(x+2)\frac{dy}{dx}+4y=2\sin\{2\log(2+x)\}$ **(R)**	**[4]**	**CO4**
2.	**Solve** the following system of simultaneous linear differential equations: **(AP)** $$\frac{dx}{dt}-7x+y=0, \qquad \frac{dy}{dt}-2x-5y=0.$$	**[4]**	**CO4**
3.	**Find** $f_{xx}(0,0)$, $f_{xy}(0,0)$, $f_{yx}(0,0)$, $f_{yy}(0,0)$ if **(R)** $$f(x,y)=\begin{cases}\frac{xy(x^2-y^2)}{(x^2+y^2)}, & for\ (x,y)\neq(0,0)\\ 0 \quad , for\ (x,y)=(0,0)\end{cases}$$	**[4]**	**CO2**
	SECTION B		
4.	(a) **Find** the dimension of a rectangular box of maximum capacity whose surface area is given when the box is open at the top. **(R)** (a) **Show** that $x\frac{\partial V}{\partial x}+y\frac{\partial V}{\partial y}+z\frac{\partial V}{\partial z}=0$, where $V=f(\frac{x}{z},\frac{y}{z})$. **(R)** (b) **Find** $\int_0^{\frac{\pi}{2}}(Cot\ x)^p\,dx$. **(R)** (c) **Show** that $\frac{d^2y}{dx^2}=-\frac{q^2r-2pqs+p^2t}{q^3}$, if $f(x,y)=0$ where $p=f_x, q=f_y, r=f_{xx}, s=f_{xy}, t=f_{yy}$. **(R)**	**[10]**	**CO2**
5.	**Illustrate** the convergence of the following series: **(U)** a) $\sum_{n=1}^{\infty}\frac{\sin(nx)}{n^2}$ b) $\sum_{n=1}^{\infty}\frac{u_n}{u_{n+1}}$, if $\sum_{n=1}^{\infty}u_n$ is convergent. c) $1-\frac{1}{2}+\frac{1}{3}-\frac{1}{4}+\cdots$	**[10]**	**CO1**
	SECTION C (Any ONE)		
6.	a) **Show** that $\left[\vec{a}+\vec{b}\,\vec{b}+\vec{c}\,\vec{c}+\vec{a}\right]=2[\vec{a}\vec{b}\vec{c}]$, where $\vec{a},\vec{b},\vec{c}$ are any three vectors. **(R)** b) **Show** that $grad\ f(r)\times\vec{R}=\vec{0}$, if $\vec{R}=(x\hat{\imath}+y\hat{\jmath}+z\hat{k})$ and $r=\lvert\vec{R}\rvert$. **(R)**	**[4+4]**	**CO1**
7.	**Apply** the method of variation of parameters to solve: **(AP)** $$\frac{d^2y}{dx^2}+2\frac{dy}{dx}+y=\frac{e^{-x}}{x^2}$$	**[8]**	**CO4**

PHY13201	Applied Science	L	T	P	C
Version 1.0	Contact Hours - 45	2	0	2	3
Pre-requisites/Exposure	12th level Physics, Chemistry, and Mathematics				
Co-requisites	--				

Course Objectives

1. Introduce students to fundamental concepts in Vector Calculus, Mechanics, and Electromagnetic Theory.
2. Provide insights into Modern Physics, including atomic structure, quantum mechanics, and nuclear physics.
3. Develop a strong understanding of Thermodynamics and its applications in physical and chemical systems.
4. Explore the kinetics of chemical reactions and theories of catalysis.
5. Enhance experimental skills through hands-on Physics and Chemistry laboratory experiments.
6. Bridge theoretical understanding with real-world applications in applied science.

Course Outcomes

At the end of the course, the student will be able to:

CO1: Recall the fundamental principles of vector calculus, mechanics, and basic laws of electromagnetism.

CO2: Explain the concepts of modern physics, including quantum mechanics, atomic structure, and nuclear phenomena.

CO3: Apply thermodynamic principles to solve problems involving heat, work, and energy in physical and chemical systems.

CO4: Analyze the kinetics of chemical reactions and determine reaction mechanisms using experimental data.

CO5: Evaluate experimental observations to determine physical parameters such as viscosity, dielectric constant, and Planck's constant.

CO6: Create experimental reports with accurate data analysis and draw conclusions by correlating theoretical concepts with practical outcomes.

Catalog Description

The course introduces essential concepts in Applied Science, combining theoretical physics and chemistry fundamentals with hands-on laboratory experiments.

- Physics Modules cover Vector Calculus, Mechanics, Electromagnetic Theory, Modern Physics, and Thermodynamics, enabling students to understand physical laws and their practical implications.
- Chemistry Modules emphasize Reaction Kinetics and analytical methods for determining physical and chemical properties.
- Laboratory experiments in both domains complement theory, enhancing measurement, observation, and analytical skills.

Course Content

Module 1: Vector Calculus and Mechanics [Lecture Hours: 6]

Scalar and Vector, Vector Operations, Gradient, Divergence and Curl, Solenoidal and Rotational Vector, Conservative and non-conservative forces. Conservation laws of energy & momentum.

Central and non-central forces, Gravitation, Kepler's Laws, Angular Velocity and Torque, Moment of Inertia, SHM, Damped, Undamped and forced Oscillations

Module 2: Electromagnetic Theory [Lecture Hours: 5]

Gauss's Law in Electrostatics, Dielectrics, Continuity equation, Biot-Savart Law and its applications, Ampere's Law, Faraday'sLaw of Induction, Maxwell's equations (differential and integral forms), Wave Equation for Electromagnetic Waves, Poynting vector, Poynting Theorem (Statement only).

Module 3: Elements of Modern Physics [Lecture Hours: 4]

Planck's Hypothesis, Photoelectric Effect, Wave Particle Duality, Schrodinger Equation (Basic Concept), Bohr Model of Atom, Quantum Number, Electron Configuration, Structure of Nucleus, Radioactivity, Nuclear Reactions and Energy, Crystal Structure, Band Theory of Solids, Semiconductors: Intrinsic and Extrinsic

Module 4: Thermodynamics [Lecture Hours: 9]

Importance and scope, definition of system and surroundings: type of systems (isolated, closed and open); extensive and intensive properties; steady state versus equilibrium state; concept of thermal equilibrium and the zeroth law of thermodynamics; thermodynamic coordinates, state of a system, equation of state, state functions and path functions; concept of heat and work (IUPAC convention), process: isothermal and adiabatic process; first law of thermodynamics, internal energy (U) as a state function; enthalpy as a state function; heat changes at constant volume and constant pressure; relation between Cp and Cv using ideal gas; Thermodynamics of Chemical Processes, Thermochemistry, Concept of entropy, 2nd law of thermodynamics, Equilibrium conditions for closed systems.

Module 5: Reaction Kinetics [Lecture Hours: 6]

Rate laws, 1stOrder reaction & 2ndorder reaction, Arrhenius equation, Mechanism and Theories of reaction rates, kinetic and thermodynamic control of reaction; idea of rate determining step; steady-state approximation; Theories of Catalysis, Characteristics and types of Catalyst.

Experiments: Physics (Any Five)

1. Determination of Young's Modulus of a Beam by travelling microscope by FLEXURE method.
2. Carry Foster's Method to Determine Resistance of a Given Coil.
3. Determination of the Coefficient of viscosity of water by Poiseulle's Capillary Flow method.
4. To determine the wavelength of sodium light by forming Newton's Ring.
5. Determination of Rigidity Modulus by dynamical method.
6. Determine the Plank's constant using photocell.
7. To verify Stefan's law by electrical method.
8. To study the temperature dependence of reverse saturation current in a junction diode and hence to determine the Band gap.
9. Determination of specific charge(e/m) of electron by J.J. Thomson's method.
10. Determination of the Rydberg constant by studying hydrogen or helium spectrum.
11. Determination of dielectric constant of a given dielectric material.
12. Determination of Hall coefficient of Semiconductor.
13. Study current – voltage characteristic load response of photovoltaic solar cells.

Experiments: Chemistry (Any Five)

1. Determination of total hardness of water by complexometric titration method.
2. Determination of carbonate and bicarbonate in water.
3. Estimation of iron by permanganometry.
4. Estimation of ferrous ion in Mohr salt.
5. Dissolved oxygen by Winkler's method. Conductometric titration (acid-base)

Textbooks and References

1. “Fundamentals of Physics” by Halliday, Resnick, and Walker.
2. “University Physics” by Sears and Zemansky.
3. “Introduction to Electrodynamics” by David J. Griffiths.
4. “Modern Physics” by Kenneth S. Krane.
5. “Concept of Modern Physics”by Arthur Beiser, S Rai Choudhury, Shobhit Mahajan.
6. “Engineering Chemistry” (Cambridge University Press-Ist Edition) – Shikha Agarwal.
7. “Engineering Chemistry” (Pearson Ed.)-K. Sesha Maheswaramma and MridulaChugh.
8. “Advanced Practical Chemistry”, The world press private ltd. Subhas C Das.

Modes of Evaluation: Quiz/Assignment/ presentation/ extempore/ Written Examination
Examination Scheme:

Components	Class Assessment	End Term Examination
Weightage (%)	50	50

Relationship between the Course Outcomes (COs) and Program Outcomes (POs)

Course Code	Course Name	COs	PO1	PO2	PO3	PO4	PO5	PO6	PO7	PO8	PO9	PO10	PO11	PO12	PSO1	PSO2	PSO3
PHY13201	Applied Science	CO(PHY13201).1	3	1	-	-	-	-	-	-	-	-	-	1	-	-	-
		CO(PHY13201).2	3	-	-	-	-	-	-	-	-	-	-	1	-	-	-
		CO(PHY13201).3	3	3	-	-	-	-	-	-	-	-	-	1	-	-	-
		CO(PHY13201).4	-	-	-	-	-	-	-	-	-	-	-	-	-	-	-
		CO(PHY13201).5	3	2	-	-	-	-	-	-	-	-	-	1	-	-	-
		CO(PHY13201).6	3	2	-	-	-	-	-	-	-	-	-	1	-	-	-
		CO(PHY13201)	3	2	-	-	-	-	-	-	-	-	-	1	-	-	-

1=weakly mapped
2= moderately mapped
3=strongly mapped

Model Question Paper

ADAMAS UNIVERSITY
SCHOOL OF ENGINEERING AND TECHNOLOGY

END-SEMESTER EXAMINATION: JULY 2020

Name of the Program: B. Tech | Semester: I | Stream: CSE
PAPER TITLE: Applied Science | PAPER CODE: PHY11201
Maximum Marks: 40 | Time duration: 3 hours
Total No of questions: 14 | Total No of Pages: 02

Instruction for the Candidate:

1. At top sheet, clearly mention Name, Univ. Roll No., Enrolment No., Paper Name & Code, Date of Exam.
2. All parts of a Question should be answered consecutively. Each Answer should start from a fresh page.
3. Assumptions made if any, should be stated clearly at the beginning of your answer.

Section A (Answer All the Questions) (5 x 1 = 5)			
1.	**Define** polarization of light.	**R**	**CO2**

2.	**State** Faraday's law of Electromagnetic induction.	**R**	**CO3**
3.	**Define** Gauss's divergence theorem.	**R**	**CO1**
4.	**Define** internal energy of a thermodynamics system	**R**	**CO4**
5.	**State** Arrhenius relation between rate constant and temperature	**R**	**CO5**
	SECTION B (Attempt any **Three Questions) (3 x 5 = 15)**		
6.	A cubical block of side L and density d is floating in a water of density ρ(ρ>d). The block is slightly depressed and released. **Show that** it will execute simple harmonic motion and hence **determine** the frequency of oscillation.	**Ap**	**CO1**
7.	**Show** that intensity distribution for diffraction in a single slit is given by, $$I = I_0 \frac{(\sin^2 \alpha)}{\alpha^2}$$ Where $= \frac{\pi a}{\lambda} \sin\theta$, a is the width of the slit, λ is the wavelength of light and θ is the angle of diffraction.	**U**	**CO2**
8.	**Explain** Maxwell's modification on Ampere's law.	**Evaluate**	**CO3**
9.	Show that $C_P - C_V = [p + \left(\frac{\delta U}{\delta V}\right)_T]\left(\frac{\delta V}{\delta T}\right)_P$. Hence find the value for an ideal gas. Comment on the value of (C_P-C_V) for a solid or a liquid.	**Ap**	**CO4**
10	(a) When order and molecularity of reaction can be same? (b) Why does order can be fractional but molecularity cannot? (c) Write the units of rate constants for zero and second order reaction.	**U**	**CO5**
	SECTION (Answer Any Two Questions) (2 x 10 = 20)		
11.	(a) **Find** out the condition for maximum and minimum intensity in Young's Double slit experiment for Interference of Light. **Show** that Energy remains constant in this phenomena. [3+1] (b) In an interference experiment,'d' is the distance between the two coherent sources of light with wavelength λ and D is the distance between source to screen. **Show** that the separation between the two consecutive dark bands is given by β=λD/d. [4] (c) In Newton's Rings experiment the diameter of the 5th dark ring is 0.336 cm. and the diameter of the 15th dark ring is 0.590 cm. **Find** the radius of the plano-convex lens if the wavelength of the light used is 5890 A. [2]	**R** **U** **U** **R**	**CO2**
12.	(a) **Derive** equation of continuity for current. **Show** that for steady current it reduces to $\nabla.\vec{J}=0$. [4] (b) **Compare** the electrostatic force and Gravitational force between a proton and electron in a hydrogen atom. Given $e = 1.6 \times 10^{-19}c, m_e = 9.1 \times 10^{-31}kg, m_p = 1.7 \times 10^{-27}kg \text{ and } G = 6.67 \times 10^{-11}Nm^2kg^{-2}$. [3] (c) Five equal charges of 40 nC each are placed at five vertices of a regular hexagon of 6 cm side. The sixth vertex is free. **Determine** the electric field at the centre of the hexagon due to the distribution. [3]	**Create, U** **U** **Evaluating**	**CO3**
13.	(a) $dU=C_V\,dT$ Is this valid for all systems? State the conditions under which the equation is valid. [2] (b) Show that PV^γ= constant for an adiabatic process of a gas. State all the assumptions. [4]	**U** **U**	**CO-4**

	(c) I mole of an ideal gas is allowed to expand freely under adiabatic condition to double of its volume. The initial temperature of the gas is 300 K and the initial pressure is 1 atm. Find the final temperature, final pressure of the gas. Also calculate $\Delta U+\Delta H$ for the process. [4]	**Evaluating**	
14.	(a) What effect does temperature has on the rate of chemical reactions? Explain it on the basis of Arrhenius equation. [4] (b) Initial rate of a first order reaction increases three fold when temperature changes from 400 K to 420 K. If the half-life period of the reaction at 400 K is 10 min, calculate the time required for 20 % conversion of the reactant at 420 K and the activation energy. [4] (c) What is the significance of activation energy? [2]	**U** **Evaluating** **U**	**CO-5**

CSE11001	Introduction to Programming	L	T	P	C
Version 1.0		2	0	0	2
Pre-requisites/Exposure	10+2 Level Mathematics, Knowledge of Basics of Computer				
Co-requisites	Knowledge of Logical Reasoning and Analysis				

Course Objectives

1. To understand the nature of programming as human activity.
2. To practice the programming construct to solve multi-dimensional problems.
3. To relate and implement mathematical concepts through programming in order to solve computational problems.
4. To enable students to acquire structure and written expression required for their profession.
5. To understand the principles of data storage and manipulation.

Course Outcomes

On completion of this course, the students will be able to

CO1. Remember basics concepts of programming structure and implement the basics concepts of Programming.
CO2. Understand various problems using programming language and select the best solution.
CO3. Apply modularized solution and design such programs to appraise the solution
CO4. Analyze the basic usage of memory and construct such memory in terms of array in a program.
CO5. Evaluate different data structures for various collection of data.
CO6. Create a 'C program' to solve a real life problem

Catalog Description

Programming skills are mandatory for designing or solving problems through digital device. It is the language through which computational/digital devices are communicated rather interfaced. To develop any software programming language is a must. In present era almost all aspect of life is somehow largely related to virtualization and digital data/information. Devices from smartphones to other handheld devices, drones, cameras, medical instruments etc. all needs programming at some part. In engineering it has become quintessential for the students/research scholars to learn programming. In this course, students will learn how to solve problems in various domains through a programming language. This course enables students with the basic skills of C Programming Language. Five Different related modules comprise this course. First Unit familiarizes students with basics of computers, algorithmic method to solve problem, introduction to generic programming construct. Basics of C Programming is upto iterative structure is depicted in Unit II. In Unit III students will learn about modularization using functions and one advance concept of C Programming, Pointers. Unit IV will cover one of the most important concepts in C Programming, Array and Strings. Unit V will accomplish this course with the advance concept like Structure, Union and File Handling. After this course students will grow their analytical ability to solve problem and logical skill. Also, this course effectively creates the ability to grasp any other Programming Language in easier manner.

Course Content

Unit I: 4 lecture hours

Basic Concepts of Programming: Introduction to components of a Computer System (disks, memory, processor, where a program is stored and executed, operating systems, compilers, etc.), Idea of Algorithm: steps to solve logical and numerical problems, Representation of Algorithms: Flowchart/Pseudo code with examples, From Algorithms to Programs; source code, variables and memory locations, Syntax and Logical Errors in compilation, Object and Executable code

Unit II: 10 lecture hours

Basics of C Programming : Characters used in C, Identifiers, Keywords, Data type & sizes, Constants &Variables, Various Operators used such as Arithmetic Operators, Relational & Logical Operators, Increment & Decrement Operators, Assignment Operators, Conditional or Ternary Operators, Bitwise Operators & Expressions; Standard Input & Output, formatted input scanf( ), formatted output printf( ); Flow of Control, if-else, switch-case, Loop Control Statements, for loop, while loop, do-while loop, nested loop, break, continue, goto, label and exit( ) function

Unit III: 10 lecture hours

Functions and Pointers: Definition of Function, Declaration or Prototype of Function, Various types of Functions, Call by Value, Call by Reference, Recursion, Tail Recursion, Definition of Pointer, Declaration of Pointer, Operators used in Pointer, Pointer Arithmetic, Functions with Pointer

Unit IV 17 lecture hours

Arrays and String: Definition, Single and Multidimensional Arrays, Representation of Arrays - Row Major Order, and Column Major Order, Application of arrays – searching and sorting, Sparse Matrices and their representations. Definition of a String, Declaration of a String, Initialization of a String, Various String Handling Functions with example

Structures and Unions: Definition of a Structure, Declaration of a Structure & Structure Variable, Initialization of a Structure, Operators used in Structure, Structure within Structures, Union, Difference between a Structure and a Union

Files: Types of File, File Processing, Handling Characters, Handling Integers, Random File Accessing, Errors During File Processing

Unit V 4 lecture hours

Overview of Stacks and Queues: Introduction to Stack, Primitive operations on Stack, Real-life applications of Stack, Introduction to Queues, Primitive operations on Queues, Real-life applications of Queues.

Text Books

1. Balagurusamy, E., n.d. Programming In ANSI C. 5th ed. Bangalore: mcgraw-hill.
2. Gotfreid (196) *Schaum's Outline of Programming with C*, 2 edn., USA: McGraw-Hill
3. Brian W. Kernighan, Dennis Ritchie (1988) *C Programming Language*, 2 edn., : Prentice Hall.

Reference Books

1. Al Kelley, Ira Pohl (1988) *A Book on C*, 4 edn., : Addision Wesley Longman

Modes of Evaluation: Quiz/Assignment/ presentation/ extempore/ Written Examination

Examination Scheme:

Components	Class Assessment	End Term Examination
Weightage (%)	50	50

Relationship between the Course Outcomes (COs) and Program Outcomes (POs)

Course Code	Course Name	COs	PO1	PO2	PO3	PO4	PO5	PO6	PO7	PO8	PO9	PO10	PO11	PO12	PSO1	PSO2	PSO3
CSE1 1001	Introduction to Programming	CO(CSE1 1001).1	3	2	2		1						1				
		CO(CSE1 1001).2	3	2	2		1						1				

		CO(CSE11001).3	3	2	2		1						1				
		CO(CSE11001).4	3	2	2		1						1				
		CO(CSE11001).5	3	2	2		1						1				
		CO(CSE11001).6	3	2	2		1						1				
		CO(CSE11001)	3	2	2		1						1				

1=weakly mapped
2= moderately mapped
3=strongly mapped

Model Question Paper

ADAMAS UNIVERSITY
SCHOOL OF ENGINEERING AND TECHNOLOGY

END-SEMESTER EXAMINATION: JULY 2020

Name of the Program: B. Tech Semester: I Stream: CSE
PAPER TITLE: INTRODUCTION TO PROGRAMMING PAPER CODE: CSE11001
Maximum Marks: 40 Time duration: 3 hours
Total No of questions: 12 Total No of Pages: 01

Instruction for the Candidate:

1. At top sheet, clearly mention Name, Univ. Roll No., Enrolment No., Paper Name & Code, Date of Exam.
2. All parts of a Question should be answered consecutively. Each Answer should start from a fresh page.
3. Assumptions made if any, should be stated clearly at the beginning of your answer.

	Section A (attempt any two)		
1.	What do you understand data types?	**1**	**CO1**
2.	Define array?	**1**	**CO4**
3.	How user defined function reduces the no. of lines in a large program?	**1**	**CO2**
4.	Why pointer is advantageous than array?	**1**	**CO5**
5.	What is the size of an integer variable?	**1**	**CO1**
	SECTION B (Attempt any **Two Questions)**		
6.	What is dimension of an array. How many types of array are there? Can you store integer values and float type values in a single array, if not why? What you need to do to store such different types of values in an single array?	**5**	**CO4**
7.	Write an user defined function in c that would return multiple values in main() function.	**5**	**CO3**
8.	Suppose a paragraph is stored in a 2-D character array. Find a specific sentence in that paragraph using a c program.	**5**	**CO2/CO4**
9.	State the types of data types and memory occupies. What are the ways to convert from one data type to another data type with suitable example?	**5**	**CO1**
	SECTION C is Compulsory		
10.	Is it possible to take input in a 2-D array using a single for loop? Make it possible using a suitable program in c.	**10**	**CO4**
11.	Write a program in c to determine that a text is written in English or in any other language. If the text is written in any other language convert every character in its nearest English alphabets.	**10**	**CO4**
12	Write a program to create a pointer to an integer. Allocate memories for 50 elements into that pointer using both malloc() and calloc() function. Display the significance difference of using those two functions to allocate memory. Also state the specific needs of these two functions.	**10**	**CO4**

GEE11001	Electrical and Electronics Technology	L	T	P	C
Version 1.0		2	0	0	2
Pre-requisites/Exposure	Basic idea about basic mathematics				
Co-requisites	Basic idea of semiconductor devices and electromagnetism				

Course Objectives

1. To familiarize with passive components, active components and measuring instruments.
2. To familiarize the working of diodes, transistors, MOSFETS and integrated circuits.
3. To implement mini projects based on concept of electronics circuit concepts.
4. To understand d.c network theorems and apply these theorems to calculate the voltage, current and power for a given circuit.
5. To explain the concept of active power, reactive power, power factor, quality factor, steady state sinusoids.

Course Outcomes

On completion of this course, the students will be able to

CO1**.** Highlight different components used in electrical and electronics industries for common application.

CO2. Understand the working of different electrical and electronics components.

CO3. Apply the fundamental concepts of electrical and electronics technology in circuit design.

CO4. Analyze the construction and working of electrical and electronics-based measuring instruments

CO5. Evaluate different types of networks used in circuit design through Network theorems, phasor diagram, power factor, quality factor, etc.

CO6. Create different types of circuits using various components

Catalog Description

Present technology requires necessary knowledge of ELECTRONICS in most fields. Avionics, Autotropic, Agrotronics, Physics, Process Chemistry, Health Services, etc., already employ components or even whole systems based on Electronics. Thus, there is an increasing number of professionals in these and many other fields who need adequate knowledge and training. Taken this into account, ADAMAS has developed the Basic Electronics and Electricity Integrated Laboratory, capable of covering different levels of difficulty. It is based on a series of self-taught modules, each one referring to a specific area of Electronics.

Course Content

Unit I: **7 lecture hours**

D.C. Circuit Analysis and Network Theorems: Concept of network, Active and passive elements, voltage and current sources, concept of linearity and linear network, unilateral and bilateral elements, R, Land C as linear elements, source transformation, Kirchoff's Law, mesh analysis and nodal analysis, star-delta transformation, network theorems: Thevenin's theorem, Norton's theorem, maximum power transfer theorem, network analysis with dependent sources.

Unit II: **7 lecture hours**

Steady State Analysis of Single Phase A.C. Circuits: Sinusoidal, square and triangular waveforms-average and effective value, form the peak factors, concept of phasor, phasor representation of sinusoidal voltage and current, analysis of series-parallel RLC circuits. Apparent, active and reactive powers, power factor, causes and problems of low power factor, power factor improvement, resonance in series and parallel circuits, bandwidth and quality factors.

Unit III: **6 lecture hours**

Three Phase A. C. Circuits: Its necessity and advantages, meaning of phase sequence, star and delta connections, balanced supply and balanced load, line and phase voltage/current relation, three phase power measurements, two wattmeter method.

Unit IV: **6 lecture hours**

Basics of Semi-Conductors and PN Junction: Introduction; Carrier Concentrations- the Fermi Level; Electron and Hole Concentration at Equilibrium; Temperature Dependence of Carrier Concentration; Drift and diffusion current; The Hall Effect; Optical Absorption, Luminescence; PN Junction Diode in Equilibrium Conditions; PN Junction Diode in Forward Biased and Reverse Biased Condition; Breakdown in PN Junction Diodes.

Unit V: **6 lecture hours**

Bipolar Junction Transistors: Introduction, Types: NPN and PNP; Current Components; Early Effect Ebber's Moll Model; Different Configurations of a Transistor and its Characteristics; Transistor as an Amplifier (CE, CB, CC); Transistor as a Switch

Unit VI: **6 lecture hours**

Field Effect Transistors: Introduction, JFET and MOSFET, Realization of digital logic circuit using MOSFET (AND, OR, NOT etc.), Realization of switching circuit using MOSFET

Unit VII: **7 lecture hours**

Electronics Instruments & Digital Electronics Fundamental: Signal generator, Multimeter, operation of CRO and its application.Number systems, Conversions and codes, Logic gates and truth tables.

Text Books

1. Electronic Devices & Circuit Theory: Boyelstad & Nashelsky
2. Electronics Fundamental and application: D.Chattopadhyay and P C Rakshit
3. Electronic Principle: Albert Paul Malvino
4. Digital circuits and design by S Salivahanan and S Arivazhagan
5. V. N. Mittal and A. Mittal, *Basic Electrical Engineering*, Tata McGraw-Hill Publishing Company Ltd, 2006.

Reference Books

1. Electronic Circuits, Discrete and Integrated- Charles Belove and Donald L. Schilling
2. Principles of Electrical Engineering and Electronics- V K Mehta, Rohit Mehta, S Chand and Company, New Delhi
3. Solid State Electronic Devices- Ben G. Streetman and Sanjay Kumar Banerjee, PHI.
4. Fundamental of Digital Circuits by Anand Kumar 2nd Eddition,PHI LearningPal, Rajendra and Korlahalli, J.S. (2011) Essentials of Business Communication. Sultan Chand & Sons. ISBN: 9788180547294.
5. Theodore Wildi,*ElectricMachines, Drives and Power Systems*, Pearson, 2005.
6. Vincent Del Toro, *Electrical Engineering Fundamentals*, 2nd Ed., Prentice Hall India Learning Pvt. Ltd., 1989.
7. J. Millman, C. Halkias and C. D. Parikh, *Millman's Integrated Electronics: Analog and Digital Circuits and Systems*, 2nd Ed., McGraw Hill Education, 2017.
8. D. P. Leach, A. P. Malvino and G. Saha, *Digital Principles and Applications*, 8th Ed., McGraw Hill Education, 2014.

Modes of Evaluation: Quiz/Assignment/ presentation/ Written Examination

Examination Scheme:

Components	Class Assessment	End Term Examination
Weightage (%)	50	50

Relationship between the Course Outcomes (COs) and Program Outcomes (POs)

Course Code	Course Name	COs	PO1	PO2	PO3	PO4	PO5	PO6	PO7	PO8	PO9	PO10	PO11	PO12	PSO1	PSO2	PSO3
GEE 11001	Electrical and Electronics Technology	CO(GEE11001).1	3	3	2	1	1							1			
		CO(GEE11001).2	3	3	2	1	1							1			
		CO(GEE11001).3	3	3	2	1	1							1			
		CO(GEE11001).4	3	3	2	1	1							1			
		CO(GEE11001).5	3	3	2	1	1							1			
		CO(GEE11001).6	3	3	2	1	1							1			
		CO(GEE11001)	3	3	2	1	1							1			

1=weakly mapped
2= moderately mapped
3=strongly mapped

Name:

Enrolment No:

ADAMAS UNIVERSITY
PURSUE EXCELLENCE

Course: GEE11001 – Electrical & Electronics Technology

Program: B.Tech. **Semester: ODD 2020-21**

Time: 03 hrs. **Max. Marks: 40**

Instructions:

Attempt **Five Questions** compulsory from **Section A** (each carrying 1 marks); any **Three Questions** from **Section B** (each carrying 5 marks)**, any Two Questions** from **Section C** (each carrying 10 marks)**.**

	SECTION A (Compulsory)		
1. a)	In figure what is value of I_C if β_{dc} = 100. Neglect V_{BE} 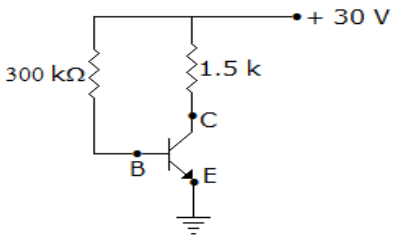	**[1]**	**CO8**
b)	Draw the symbol of p channel depletion type MOSFET and pnp transistor.	**[1]**	**CO9**
c)	Convert the numbers: **i)** $(53.625)_{10}$ = (?)$_2$, **ii)** $(A3B)_{16}$ = (?)$_{10}$	**[1]**	**CO9**
d)	What is susceptance?	**[1]**	**CO6**
e)	A load draws a current i(t) = 4 cos (100∏t + 10°) A when the applied voltage is v(t) = 120cos (100∏t -20°) V. Find the apparent power.	**[1]**	**CO6**
f)	Current through a passive element is I = sin 4t when the applied voltage across the element is V = cos 4t. Identify the passive element.	**[1]**	**CO1**
	SECTION B (Answer any Three Questions)		
2.	**a)** Draw and explain the common base transistor circuit and output characteristics. **b)** Define: **i)** Mass action law, **ii)** Mobility	**[5]**	**CO2, CO8**
3.	**a)** Discuss Early Effect in the transistor. **b)** The Transistor has a base current I_B=150µA, I_{CO}= 10 µA and α =0.98. Calculate the collector current I_C and emitter current I_E **c)** Write down the relation between Transconductance, Drain Resistance & Amplification Factor in JFET.	**[5]**	**CO1, CO8**

4.	**a)** Explain why is a transistor called a switch. **b)** Why NAND gate is called universal gate? Design and implement an AND gate using NOR gate.	**[5]**	**CO3, CO8, CO9**
5.	**a)** Define the following: **i)** Active Power. **ii)** Reactive Power. **b)** State Norton's Theorem.	**[5]**	**CO6,** **CO5**
6.	**a)** What is selectivity? **b)** Why series R-L-C circuit is called "Acceptor Circuit" at resonance?	**[5]**	**CO6**
7.	Find the current through the 10-ohm resistance in the following circuit. 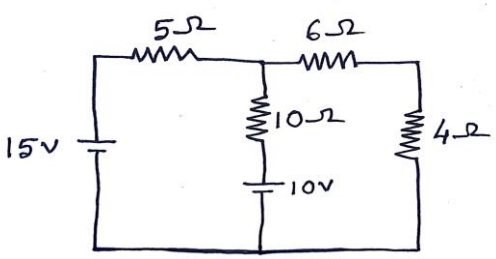	**[5]**	**CO5**
	SECTION C (Answer any Two Questions)		
8.	**a)** Explain the phenomenon of diffusion of current carriers in a semiconductor. **b)** Write down the differences between metal, insulator & semiconductor. **c)** In CE configuration, a silicon transistor with $\beta = 100$, $V_{cc} = 6v$, $R_C = 3k\Omega$ and $R_B = 530k\Omega$. Draw the dc load line and determine the operating point.	**[10]**	**CO1, CO2, CO8**
9.	**a)** What are the differences between BJT & FET? **b)** An n-type Silicon bar 0.1 cm long and 100 μm^2 in cross-sectional area has a majority carrier concentration of 5×10^{20} /m^3 and the carrier mobility is 0.13 m^2/V-s at 300° k. If the charge of an electron is 1.6×10^{-19} C, then find the resistance of the bar. **c)**Explain the following terms: **i)** Zener Breakdown **ii)** Drain characteristics of FET	**[10]**	**CO2, CO3, CO8**
10.	**a)** Find the Norton's equivalent of the circuit shown in figure as seen from terminals a-b 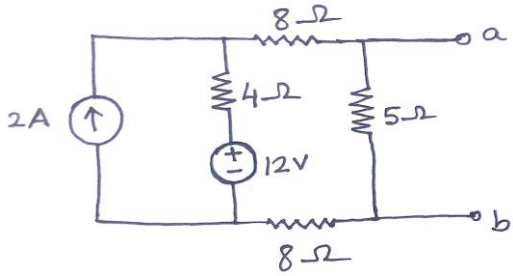 **b)** Find the value of R_L for maximum power transfer in the circuit of figure. Find the maximum power.	**[10]**	**CO5**

	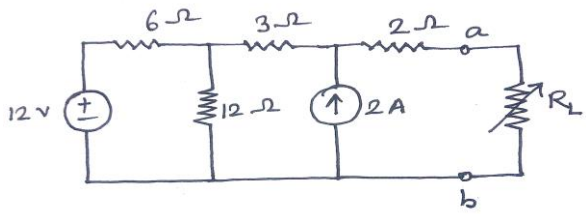		
11.	**a)** Prove that the energy stored in the inductor is, $E_L = \frac{1}{2} Li^2$(where, 'L' is the inductance and 'i' is the current through inductor) **b)** What is resonance? Derive expression of resonance frequency for series R-L-C circuit. **c)** Define the following with suitable example: **i)** Unilateral Element. **ii)** Bilateral Element. d) How to measure three phase power using single wattmeter? e) What is creeping in energy meter?	**[10]**	**CO4,** **CO7**

ENG11053	English Communication	L	T	P	C
Version 1.0		1	0	2	2
Pre-requisites/Exposure	12th level English				
Co-requisites	--				

Course Objectives

1.To know the importance and techniques of communication skills in order to improve professional skills
2.To enhance the knowledge of the students on vocabulary, syntax, and grammatical skills
3.To improve writing skills by applying writing techniques, tools in practice sessions
4.To achieve an overall enhancement in terms of reading, listening and speaking

Course Outcomes:

On completion of this course, the students will be able

CO1. To have a basic understanding of communication processes and to know the practical implications and its challenges at the workplace

CO2. To know the practical uses of English grammar and to use grammar correctly and unambiguously

CO3. To be familiar with different formats of business communication like reports, letters, and other technical writings

CO4. To acquire competence in speaking,reading,listening,and writing in English.

CO5. To be familiar with English pronunciation and use neutral accent successfully

CO6. To be able to comprehend different other accents of spoken English

Catalog Description

Effective communication is one of the basic requirements of a successful career. Both verbal and nonverbal communication is important to exchange ideas among the employees within the organisation and outside the organisation as well. In this course, the focus will be on improving LSRW skills, i.e. listening, speaking, reading and writing. Students will learn how to communicate effectively through prescribed syllabus. Classroom activities will be designed to encourage students to play an active role in the construction of their own knowledge and in the design of their own learning strategies. We will combine traditional lectures with other active teaching methodologies, such as group discussions, role play, small skit enactments, analysis of video scenes and debates. Class participation is a fundamental aspect of this course. Students will be encouraged to actively take part in all group activities and to give an oral group presentation. Students will be expected to interact with media resources, such as, web sites, videos, DVDs, and newspapers etc.

Course Content

Module I: **6 lecture hours**

Communication Level 1: Basics of Communication, Means of Communication, Barriers of Communication

Module II: **6 lecture hours**

Grammar and Syntax Level 1:Tense: types and uses, Idioms, One Word Substitutes, Discussion on the use of Articles and related exercises, Discussion on the use of Prepositions and related exercises, Exercises

on Sentence –Making (Syntax), Practice exercises on Voice change, Class Exercises on Synonyms and Antonyms.

Module III: 6 lecture hours

Reading and Listening Skills Level 1: Introduction to listening skills: purposes and practice, Discussion on types of listening: difference between listening and hearing, Active listening: introduction listening exercises, Elementary level listening exercise, Intermediate level listening exercise, Advance level listening exercise, Introduction to Reading Skills, Strategies of reading, Skimming, Scanning and Summarizing, Comprehension exercises.

Module IV: 6 lecture hours

Speaking Skills Level 1: Introduction to Speaking Skills: Mother tongue influence, Discussion on various kinds of narrative styles and techniques: Welcome speech, Vote of Thanks, Farewell Speech, Debate and Elocution, Class Exercises on Descriptive narration, Practical Exercises on Narration styles, Presentation of small skits, Practicing Extempore in the class, Mock practices of Group discussion, Practicing speaking in pairs, Mock practice of job interviews.

Module V 6 lecture Hours

Writing Skills Level 1: Business letters: definition, types and format, Practice exercises, Business reports: definition, types and format, Practice exercises, CV and Application letters: types and formats, Practice exercises, Compositions: Essays, precis paragraph writing

Text Books:

1.Kaul Asha. Effective Business Communication. PHI Learning Pvt Ltd. 2014.
2.Wren and Martin. High School Grammar And Composition. S. Chand, 1995.
3.Gupta, A. English Reading Comprehension. Ramesh Publishing House, 2009.

Reference Book:

1.Lewis, Norman. Word Power Made Easy. Anchor: 2014.
2.Riordan, Daniel G & Pauley Steven A. :Technical Report Writing Today. 2004.
3.Hamp-Lyons and Heasely, B . Study Writing; A Course in Written English. For Academic and Professional Purposes, Cambridge Univ. Press, 2006.
4.Quirk R., Greenbaum S., Leech G., and Svartik, J. A Comprehensive Grammar of the 5.English language, Longman:London, 1985.
6.Balasubramaniam, T. A Textbook of English Phonetics for Indian Students. Macmillan: 2012.

Modes of Evaluation: Quiz/Assignment/ presentation/ extempore/ Written Examination

Examination Scheme:

Components	Attendance	Class Assessment	Mid-Term	ETE
Weightage (%)	10	30	20	40

Relationship between the Course Outcomes (COs) and Program Outcomes (POs)

Course Code	Course Name	COs	PO1	PO2	PO3	PO4	PO5	PO6	PO7	PO8	PO9	PO10	PO11	PO12	PSO1	PSO2	PSO3
ENG 11053	English Communication	CO(ENG 11053).1	-	-	-	-	-	-	-	-	-	3	-	-	-	-	-
		CO(ENG 11053).2	-	-	-	-	-	-	-	-	-	3	-	3	-	-	-
		CO(ENG 11053).3	-	-	-	-	-	-	-	-	-	3	-	-	-	-	-
		CO(ENG 11053).4	-	-	-	-	-	-	-	-	-	3	-	-	-	-	-

		CO(ENG 11053).5	-	-	-	-	-	-	-	-	-	3	-	-	-	-	-
		CO(ENG 11053).6	-	-	-	-	-	-	-	-	-	3	-	3	-	-	-
		CO(ENG 11053)	-	-	-	-	-	-	-	-	-	3	-	3	-	-	-

1=weakly mapped
2= moderately mapped
3=strongly mapped

Model Question Paper

Name: **Enrolment No:**	ADAMAS UNIVERSITY PURSUE EXCELLENCE

Course: ENG11053 – English Communication

Program: B.Tech. (All Programs) **Semester: I**

Time: 03 hrs. **Max. Marks:40**

Instructions:

Attempt all questions from **Group A** (each carrying 1 mark); any **Three Questions** from **Group B** (each carrying 5 marks)**; any Two questions from Group C** (each carrying 10 marks)**.**

Group A (Answer all the questions) (5×1=5)

1.	Where were you ___ 28 February, 2019? (Fill in the blank with appropriate preposition) What is non-verbal communication?	**[1]** **[1]**	**CO2,CO1**

2. 3. 4. 5.	Give one word substitute for: "One who loves books" What is the antonym of "Happiness"? Give example of an idiom.	**[1]** **[1]** **[1]**	
	Group B (Attempt any **Three Questions) (3×5=15)**		
6.	What are the barriers to communication? Explain some physical and psychological barriers of communication	**[5]**	**CO1**
7.	What do you understand by communication? Write a note on the importance of effective communication.	**[5]**	**CO1**
8.	Fill in the blanks using suitable article. Please copy the sentences given, while answering: i. He was ____ first man to arrive. ii. Would you like to be _____ teacher? iii. I am going to buy _____ hat. iv. Picasso was ____ famous painter. v. The Ganga is ____ sacred river.	**[5]**	**CO2**
9.	Change the following sentences from active to passive voice: i. The cat killed a mouse ii. People lined the road iii. He was singing a song yesterday iv. I have read this book. v. Who broke the jug?	**[5]**	**CO2**
	Group C (Attempt any **Two Questions) (2×10=20)**		
10.	Write a paragraph on the impact of COVID 19 in our society.	**[10]**	**CO3**
11.	Write an application to the Vice-Chancellor of your University as the class representative of your respective class requesting permission to organize a science exhibition in your department	**[10]**	**CO3**

12.	.Read the following passage and answer the questions that follow. A few countries already use powerful electromagnets to build high speed trains. These trains are called maglev trains. Maglev is the shortened form of magnetic levitation. Maglev trains work on the principles of magnetism and float over a guideway. The maglev train is different from a conventional train in that it does not have an engine. At least it does not have the kind of engines that pull train cars along steel tracks. It does not consume fossil fuels either. Since maglev trains float in the air, there is no friction between the train and the track. This lack of friction and the aerodynamic design of these trains allow them to reach speeds of over 500 kilometer per hour. Japan and Germany pioneer research in the maglev train technology. They have already built their prototypes and are in the process of testing them. Transrapid is an electromagnetic suspension system developed by German engineers. The idea of maglev transportation has been in existence for over a century. The first commercial maglev train made its debut in Shanghai, China in 2002. This train was developed by a German company. Right now the Shanghai Transrapid line connects Longyang Road station and Pudong airport. China is planning to extend this line to Hangzhou by building a 99 miles guideway. Several other countries are also planning to build their own maglev train system, but right now the Shanghai maglev train is the only commercial maglev line. Complete the sentences: (2×5=10) (a) The two main differences between maglev trains and conventional trains are: ……..., …….. (b) Maglev trains are environment friendly because …… (c) The two nations that lead the research in maglev train technology are …….. (d) The two factors that help maglev trains to achieve high speeds are …….. (e) A suitable title for the passage would be ……	**[10]**	**CO4**

CSE11082	Principle and Application of AI	L	T	P	C
Version 1.0		2	0	0	2
Pre-requisites/Exposure					
Co-requisites					

Course Outcomes:

After completing this course, the students should be able to:

- CO1: Demonstrate understanding of AI concepts, lifecycle, and applications in STEM domains.
- CO2: Import, clean, and preprocess structured datasets using Python tools.
- CO3: Build and evaluate basic predictive models using statistical and machine learning techniques.
- CO4: Apply foundational techniques in computer vision and prompt engineering to solve simple AI problems.

Contents

Module 1: Introduction to AI and AI Lifecycle 2 Hours

- What is Artificial Intelligence, Machine Learning, and Deep Learning
- Use cases in STEM domains
- AI Lifecycle: Data → Model → Deployment → Feedback

Module 2: Data Import, Cleaning & Preprocessing 4 Hours

- Loading data from CSV, Excel, and APIs
- Handling missing values, outliers, normalization
- Data encoding and feature selection basics

Module 3: AI for Statistical Data & Predictive Modelling 5 Hours

- Overview of statistical AI applications
- Linear Regression and Logistic Regression
- Introduction to Decision Trees and Random Forests
- Performance metrics: accuracy, precision, recall, confusion matrix

Module 4: Introduction to Computer Vision 5 Hours

- Traditional Computer Vision techniques:
  - Grayscale conversion
  - Gaussian Blur
  - Edge detection (Sobel, Canny)
  - Contour extraction
- Basics of Convolutional Neural Networks (concept only)

Module 5: Prompt Engineering Basics 3 Hours

- Introduction to Prompt Engineering and LLMs
- Prompt structures: Instructional, Few-shot, Chain-of-Thought (conceptual)
- Applications in writing, summarization, Q&A

Module 6: Hands-On Mini Project 6 Hours

- Choose one domain: Tabular, Visual, or Text data
- Problem definition and data import
- Preprocessing and basic model application
- Visualization and result interpretation

Module 7: Career Readiness & Future Trends 5 Hours

- Tools used in industry (Colab, Hugging Face, GitHub Copilot)
- AI roles and upskilling paths
- Industry case studies and project presentations

Text Books and Reference Books

1. AI for Everyone

Author: Saptarshi Goswami

Publisher: Pearson Education

2. Introduction to Artificial Intelligence

Author: Dr. Dinesh Peter & Dr. Ajay Rana

Publisher: Cengage Learning

3. Artificial Intelligence: Made Simple

Author: H. S. Behera

Publisher: BPB Publications

4. Artificial Intelligence Simplified

Author: Amit Konar

Publisher: New Age International

5. Python Machine Learning: Machine Learning and Deep Learning with Python, scikit-learn, and TensorFlow

Author: Sebastian Raschka & Vahid Mirjalili

Publisher: Packt Publishing

Edition: 3rd Edition (or latest)

Modes of Examination: Assignment/Quiz/Project/Presentation/Written Exam

Examination Scheme:

Components	Class Assessment	End Term Examination
Weightage (%)	50	50

Relationship between the Course Outcomes (COs) and Program Outcomes (POs)

Course Code	Course Name	COs	PO1	PO2	PO3	PO4	PO5	PO6	PO7	PO8	PO9	PO10	PO11	PO12	PSO1	PSO2	PSO3

CSE 11082	Principle and Application of AI	CO(CSE11082).1	2	2			2	1	1			1		2	2	2	
		CO(CSE11082).2	3	2		1	3					2	1	2	3	2	
		CO(CSE11082).3	3	3	2	2	3	1				2	1	2	3	3	2
		CO(CSE11082).4	2	2	2	1	3	1			2	3	2	3	2	2	2
		CO(CSE11082)	2	2	2	1	3	1			2	3	2	3	2	2	2

BIT11003	Life Sciences	L	T	P	C
Version 1.0	Contact Hours - 45	2	0	0	2
Pre-requisites/Exposure	Class 12Biology				
Co-requisites	--				

Course Objectives:

1. To acquire the knowledge about the cell structure and interaction with neighboring cells in biological system.
2. To gain the knowledge about the genetic switches and oscillators and evolutionary dynamics.
3. To acquire the knowledge about the transport of molecules in different cellular compartments.
4. To gain the knowledge about dynamics of different systems in human body.
5. To understand the application and significance of different techniques of medical biotechnology.

Course Outcomes

At the end of the course, the student will be able to:

CO-1 Remember the structure and functions cell organelles and their interrelationship.

CO-2 Understand the genetic switches and evolutionary dynamics of living system.

CO-3 Examine the mode of transport of molecules in biological system numerically.

CO-4 Analyze the different networks of human body and other physiological systems and can summarize consequences of physiological disorders.

CO-5 Review different techniques of medical biotechnology on human body to analyse the malfunction of different human system during diseased conditions.

CO6 Devise a moral code of conduct for various scientific practices

Course Description:

Cell is the structural and functional unit of living organism, it is well known throughout the universe, but mystery the molecular mechanism for performing the different kinds of functions of cell organelle (along with their development in both plant and animal system) and their integration into a beneficial outcome for living organism and as well as the outcome of physiological responses is almost unknown. So the course consists of structure function relationship of cell organelles, trafficking of different molecules between different cellular compartments and their secretion, creation of physiological responses and their assessment by several kinds of instrumentation techniques which can create a common platform between science of engineering and biological science.

Course Content:

Unit I: Cell biology & Communication [7 hours lecture]

Structure, function, and synthesis of cellular membranes and organelles; cell growth and cancer; cytoskeleton and extracellular matrix; cell cycle; transport, receptors, and cell signaling; functions of specialized cell types.

Unit II: Genetics & Systems Biology [4 hours lecture]

Genetic switches and oscillators, cell-to-cell interactions, cellular and genetic networks, and evolutionary dynamics.

Unit III: Transport & Flow in Biological Systems [7 hours lecture]

Diffusion, osmosis, facilitated, and active transport; Heat Conduction and Radiation; Fluid Dynamics; Heat and Mass Transfer. Electromechanical and physicochemical interactions in cells and biomaterials

Unit IV: Human Physiology & Diseases [10 hours lecture]

Anatomical, physiological and pathological features of the cardiovascular, respiratory and renal systems. Identifications of deficiencies and diseases from blood, urine and feces; genetic disorders and gene therapy.

Unit V: Neurophysiology [10 hours lecture]

Neuron structure and function; Regeneration of nerve; flow and transport of signals from one neuron to other; Nervous system; Aging and its effect on brain; Behavioral functions of the brain - emotion, memory, learning and consciousness; Disorders of the nervous system and treatment.

Unit VI: Medical Biotechnology [7 hours lecture]

Understanding the handling and usefulness of electrocardiograms, ultrasound images, X-ray images, magnetic resonance images (MRI), computerized tomography (CT) or computerized axial tomography (CAT) images, glucose sensors, and other biosensors.

Text Books

T1. Biology for Engineers by Arthur T. Johnson. CRC Press, 1 edition, 2010.

T2. New Biology for Engineers and Computer Scientists by AydinTozeren and Stephen W. Byers. Pearson, 1 edition, 2003.

Reference Books

R1. Applied Cell and Molecular Biology for Engineers by Gabi Nindl Waite and Lee R. Waite. McGraw-Hill Education, 1 edition, 2007.

R2. Samson Wright's Applied Physiology.

Modes of Examination: Assignment/Quiz/Project/Presentation/Written Exam

Examination Scheme:

Components	Class Assessment	End Term Examination
Weightage (%)	50	50

Relationship between the Course Outcomes (COs) and Program Outcomes (POs)

Course Code	Course Name	COs	PO1	PO2	PO3	PO4	PO5	PO6	PO7	PO8	PO9	PO10	PO11	PO12	PSO1	PSO2	PSO3
BIT11003		CO(BIT11003).1	3	2	2	1	2	-	1	1	1	-	1	-			

	Life sciences	CO(BIT1 1003).2	-	-	2	-	-	1	1	-	-	-	1	-			
		CO(BIT1 1003).3	2	1	1	2	1	1	-	1	-	1	1	-			
		CO(BIT1 1003).4	1	1	2	-	1	2	-	3	2	2	1	2			
		CO(BIT1 1003).5	-	1	1	-	1	2	-	2	3	3	1	2			
		CO(BIT1 1003).6	-	1	1	-	1	2	-	2	3	3	1	2			
		CO(BIT1 1003)	1	1	1	2	1	2	1	2	3	3	1	2			

1=weakly mapped,
2= moderately mapped,
3=strongly mapped

Model Question Paper

Name: **Enrolment No:**	ADAMAS UNIVERSITY PURSUE EXCELLENCE

Name of the Program: B.Tech — Semester: II
Stream: Mechanical Engineering
PAPER TITLE: Life Science — PAPER CODE: BTT11003
Maximum Marks: 40 — Time duration: 3 hours
Total No of questions: 08 — Total No of Pages: 01

Instructions:
Attempt any three questions from **Section A** (each carrying 4 marks); any **Two Questions** from **Section B** (each carrying 10 marks)**. Section C** is Compulsory (carrying 8 marks)**.**

Section A (Attempt **any Three)**

1.	**Discuss** role of different cell organelles in eukaryotic cells. (U)	**4**	**CO1**
2.	**Compare** between Prokaryotic and eukaryotic cells. (U)	**4**	**CO1**
3.	**What** are the consequences of physiological disorders? (R)	**4**	**CO4**
4.	If someone is suffering from cancer, **what treatment can be given to treat the cancerous cells?** (Ap)	**4**	**CO3**

	SECTION B (Attempt any **Two Questions)**		
5.	**Explain** oncogenes. **How** can they affect the cells**? Is this relates with** Tumor suppressive gene? Discuss in detail. (Ap)	**10**	**CO1** **CO2**
6.	a) **What** are the factors influencing living cells and negative as well as positive ways? (U) b) **Explain** different type of networks in human body.	**4** **6**	**CO1** **CO4**
7.	a) **Explain** different techniques of medical biotechnology on human body to analyze the malfunction of different human system during diseased conditions. (Ap)	**10**	**CO5**
	SECTION C is Compulsory		
8.	a) **What** is cell? (U) b) **How** plant cells are different from animal cells? **Explain** any two cell organelles which are considered to be evolved by bacterial cells. (An)	**2** **6**	**CO1**

DGS11002	Design Thinking & Prototyping	L	T	P	C
Version 1.0	Contact Hours - 45	1	0	2	3
Pre-requisites/Exposure	Knowledge of analyzing society problems and product usage problems and a zeal to improve the current situation, in addition to knowing to using laptop/computers, internet, social media interaction, file sharing and uploading, email and communication etiquettes.				
Co-requisites	--				

Course Objectives

1. To enable students to acquire knowledge, imagination and be more assertive on opinions on problems in society.
2. To enable students to learn basics of research, data collection, analysis, brainstorming to find solutions to issues.
3. To make them understand Design Thinking methodologies to problems in field of study and other areas as well.
4. To help students to understand future Engineering positions with scope of understanding dynamics of working between inter departments of a typical OEM.

Course Outcomes

On completion of this course, the students will be able to
CO1. Understand What Is Design Thinking?

CO2. Understand the Design Thinking Model and various stages of the same.
CO3. Understanding stages of Discovery, Defining a real time problem through primary and secondary research and discovery canvas.
CO4. Attempting to find solutions through concept development and simple prototyping.
CO5. Testing the developed prototype and iterating to perfect out the solutions for chosen problem.
CO6. Apply Design Thinking for solving real-world challenges

Catalog Description

Design thinking course is a completely online course offered to the first year UG programs across all streams. This course is designed to help understand the steps followed in the process of designing a solution to a problem.

Course Content

Unit I: 2 Lecture Hours

WHAT IS DESIGN THINKING: Designers seek to transform problems into opportunities. Through collaboration, teamwork, and creativity, they investigate user needs and desires on the way to developing human-centered products and/or services. This approach is at the very heart of design thinking.

Unit II: 2 Lecture Hours

THE DESIGN THINKING MODEL: A tool that helps guide you along a design thinking path. The model does this by providing a series of activities that that will help you effectively design a product, service or solution to a user's need. The model presents the approach as a process, allowing us to look at each step – or phase – along the journey to the development of a final design.

Unit III: 4 Lecture Hours

PHASE 1: DISCOVER: Begin the design thinking process with the Discover phase, where you will identify the specific problem your design is intended to solve, as well as important usability aspects from

those who will use your design. Discovery can be performed through a variety of different research methods which you will learn in this module.

Unit IV: 4 Lecture Hours

PHASE 2: DEFINE: In the Define phase, you come to understand the problem. We often refer to this as framing the problem. You can do this by using a variety of tools, including storytelling, storyboarding, customer journey maps, personas, scenarios, and more.

Unit V: 4 Lecture Hours

PHASE 3: DEVELOP: Turn your attention to solving the problem. In this phase you brainstorm custom creative solutions to the problems previously identified and framed. To do this, you conceptualize in any way that helps, putting ideas on paper, on a computer, or anywhere whereby they can be considered and discussed.

Unit VI: 4 Lecture Hours

PHASE 4: DELIVER: This phase is all about testing and building concepts. Here you take all of the ideas that have been discussed to this point and bring them a little closer to reality by building a concept; something that makes it easier for a user to experience a design. This concept is referred to as a prototype.

Unit VII: 4 Lecture Hours

PHASE 5: ITERATE: You will test the prototype of your design solution, collecting and acting on feedback received. These actions may mean minor or major revisions to your design, and are repeated as often as necessary until a solution is reached. Tools such as focus groups and questionnaires are used to help you collect feedback that can help with your final design.

Unit VIII: 2 Lecture Hours

BEYOND DESIGN THINKING: The Design Thinking Model is a tool that helps guide you along a design thinking path. The model does this by providing a series of activities that that will help you effectively design a product, service or solution to a user's need. The model presents the approach as a process, allowing us to look at each step – or phase – along the journey to the development of a final design.

Reference Books

1. Brown, Tim. "What We Can Learn from Barn Raisers." Design Thinking: Thoughts by Tim Brown. Design Thinking, 16 January 2015. Web. 9 July 2015.
2. Knapp, Jake. "The 8 Steps to Creating a Great Storyboard." Co.Design. Fast Company & Inc., 21 Dec. 2013. Web. 9 July 2015.
3. van der Lelie, Corrie. "The Value of Storyboards in the Product Design Process." Journal of Personal and Ubiquitous Computing 10.203 (2006): 159–162. Web. 9 July 2015. [PDF].
4. Millenson, Alisson. "Design Research 101: Prototyping Your Service with a Storyboard." Peer Insight. Peer Insight, 31 May 2013. Web. 9 July 2015.

Modes of Evaluation: Quiz/Assignment/ presentation/ extempore/ Written Examination
Examination Scheme:

Components	Class Assessment	End Term Examination
Weightage (%)	50	50

Relationship between the Course Outcomes (COs) and Program Outcomes (POs)

Course Code	Course Name	COs	PO 1	PO 2	PO 3	PO 4	PO 5	PO 6	PO 7	PO 8	PO 9	PO 10	PO 11	PO 12	PSO 1	PSO 2	PSO 3

DGS 1100 2	Design Thinking & Prototyping	CO(DGS11002).1	-	-	2	2	2	1	1	-	1	1	1	3	-	-	-
		CO(DGS11002).2	-	-	2	2	2	2	1	-	1	1	1	3	-	-	-
		CO(DGS11002).3	1	1	3	2	2	1	3	1	2	2	3	3	-	-	-
		CO(DGS11002).4	-	-	3	3	3	3	3	1	2	2	2	3	-	-	-
		CO(DGS11002).5	1	-	2	1	1	2	1	1	1	1	1	2	-	-	-
		CO(DGS11002).6	-	-	-	2	1	3	-	2	2	-	2	1	-	-	-
		CO(DGS11002)	-	-	2	2	2	1	1	-	1	1	1	3	-	-	-

1=weakly mapped
2= moderately mapped
3=strongly mapped

Model Question Paper

ADAMAS UNIVERSITY
SCHOOL OF ENGINEERING AND TECHNOLOGY
END-SEMESTER EXAMINATION: JULY 2020

Name of the Program: B. Tech Semester: I Stream: CSE
PAPER TITLE: Design Thinking

PAPER CODE: DGS11001
Maximum Marks: 40 Time duration: 3 hours
Total No of questions: 12 Total No of Pages: 01

Instruction for the Candidate:

1. At top sheet, clearly mention Name, Univ. Roll No., Enrolment No., Paper Name & Code, Date of Exam.
2. All parts of a Question should be answered consecutively. Each Answer should start from a fresh page.
3. Assumptions made if any, should be stated clearly at the beginning of your answer.

	Section A (Answer All the Questions) (5 x 1 = 5)		
1.	List the steps involved in Design Thinking.	**U**	**CO1**
2.	Enumerate the basic elements of Design Thinking.	**U**	**CO2**
3.	Define Napkin Pitch.	**R**	**CO3**
4.	What is Assumption testing?	**R**	**CO4**
5.	Give the principles of Ethnography.	**U**	**CO2**
	SECTION B (Attempt any **Three Questions) (3 x 5 = 15)**		
6.	Briefly explain the importance of ethnography in design thinking?	**U**	**CO2**
7.	What are the successive steps for concept development?	**Ap**	**CO3**
8.	Elucidate the different types of concept development strategies.	**Ap**	**CO3**
9.	Explain with Example: surface keys for Assumption Testing.	**Evaluate**	**CO4**
	SECTION (Answer Any Two Questions) (2 x 10 = 20)		
10.	Explain in detail about importance of prototyping in Design Thinking.	**U**	**CO4**
11.	Write an importance of involving stakeholders in developing new concepts and Plan for conducting experiments within short time and inexpensively.	**Create**	**CO3**
12.	Distinguish between design thinking and visualization of a problem.	**An**	**CO1**

CSE12002	Programming Lab	L	T	P	C
Version 1.0		0	0	4	2
Pre-requisites/Exposure	10+2 Level Mathematics, Knowledge of Basics of Computer				
Co-requisites	Knowledge of Logical Reasoning and Analysis				

Course Objectives

1. To comprehend the practical nature of programming by solving through computer systems.
2. To practice the programming construct to solve multi-dimensional problems.
3. To relate and implement mathematical concepts through programming in order to solve computational problems.
4. To enable students to acquire structure and written expression required for their profession.
5. To understand the principles of data storage and manipulation.

Course Outcomes

On completion of this course, the students will be able to

CO1. List and memorize various Unix commands. Also, students be able to construct various basic programs and appraise them.
CO2. Design and execute iterative statement in a program. Also, students be able to differentiate among different iterative structure.
CO3. Construct such programs that used to define user defined functions and to design library functions.
CO4. Implement array concept in 1-Dimensional and 2-Dimensional construct. Hence be able to design string functions to cater to various character array related problem.
CO5. Implement the concept of Stack, Queue, and Linked List and appraise them in different cases.
CO6. Simulate real life problems

Catalog Description

Practical Programming skills are mandatory for designing or solving problems through digital device by implementation. To develop any software the behavior of a programming language is a must through problem solving. In present era almost all aspect of life is somehow largely related to virtualization and digital data/information. Devices from smartphones to other handheld devices, drones, cameras, medical instruments etc. all needs programming at some part. In engineering it has become quintessential for the students/research scholars to learn programming. In this course, students will learn how to solve problems in various domains through a programming language. This course enables students with the basic skills of C Programming Language. Five Different related modules comprise this course. First Unit familiarizes students with basics of computers, algorithmic method to solve problem, introduction to generic programming construct. Basics of C Programming is upto iterative structure is depicted in Unit II. In Unit III students will learn about modularization using functions and one advance concept of C Programming, Pointers. Unit IV will cover one of the most important concepts in C Programming, Array and Strings. Unit V will accomplish this course with the advance concept like Structure, Union and File Handling. After this course students will grow their analytical ability to solve problem and logical skill. Also, this course effectively creates the ability to grasp any other Programming Language in easier manner. In all these modules related programming problems are practiced to understand the syntactical and semantical correctness of a program. Gradually students become more comprehensive through the progress of the course.

Course Content

Experiments:

1. Familiarization with LINUX commands and vi editor.
2. Programs to demonstrate Decision Making, Branching and Looping, Use of break and continue statement etc.
3. Implementation involving the use of Arrays with subscript, String operations and pointers.

4. Implementation involving the use Functions and Recursion.
5. Implementation involving the use Structures and Files.
6. Implementation based on Stack Queues and Linked List for example Insertion and Deletion.

Text Books

1. Balagurusamy, E., n.d. Programming In ANSI C. 5th ed. Bangalore: McGraw-hill.
2. Gotfreid (196) *Schaum's Outline of Programming with C*, 2nd ed., USA: McGraw-Hill
3. Brian W. Kernighan, Dennis Ritchie (1988) *C Programming Language*, 2nd ed., : Prentice Hall.
4. Das Sumitabha, UNIX Concepts and Applications, 4th Ed., New Delhi, Tata McGraw-Hill

Reference Books

1. Al Kelley, Ira Pohl (1988) *A Book on C*, 4th ed. Addision Wesley Longman

Modes of Evaluation: Quiz/Assignment/ presentation/ extempore/ Written Examination

Examination Scheme:

Components	Internal Assessment	End Term Examination
Weightage (%)	30	40

Relationship between the Course Outcomes (COs) and Program Outcomes (POs)

Course Code	Course Name	COs	PO1	PO2	PO3	PO4	PO5	PO6	PO7	PO8	PO9	PO10	PO11	PO12	PSO1	PSO2	PSO3
CSE12002	Programming Lab	CO(CSE12002).1	3	3	2	1	1	2	1	-	3	-	-	1			
		CO(CSE12002).2	2	2	2	3	1	1	3	-	3	-	-	1			
		CO(CSE12002).3	3	1	3	2	1	1	3	-	1	-	-	1			
		CO(CSE12002).4	3	3	2	2	1	3	3	-	2	-	-	3			
		CO(CSE12002).5	3	2	1	1	2	2	1	-	2	-	2	2			
		CO(CSE12002).6	3	2	1	1	2	2	1	-	2	-	2	2			
		CO(CSE12002)	3	2	1	1	2	2	1	-	2	-	2	2			

1=weakly mapped
2= moderately mapped
3=strongly mapped

Model Question Paper

ADAMAS UNIVERSITY
SCHOOL OF ENGINEERING AND TECHNOLOGY
END-SEMESTER EXAMINATION: JULY 2020

Name of the Program: B. Tech Semester: I Stream: CSE
PAPER TITLE: PROGRAMMING LAB PAPER CODE: CSE12002
Maximum Marks: 40 Time duration: 3 hours
Total No of questions: 12 Total No of Pages: 01

Instruction for the Candidate:

1. At top sheet, clearly mention Name, Univ. Roll No., Enrolment No., Paper Name & Code, Date of Exam.
2. All parts of a Question should be answered consecutively. Each Answer should start from a fresh page.
3. Assumptions made if any, should be stated clearly at the beginning of your answer.

	Section A (attempt any two)		
1.	What do you understand data types?	**1**	**CO1**
2.	Define array?	**1**	**CO4**
3.	How user defined function reduces the no. of lines in a large program?	**1**	**CO2**
4.	Why pointer is advantageous than array?	**1**	**CO5**
5.	What is the size of an integer variable?	**1**	**CO1**
	SECTION B (Attempt any **Two Questions)**		
6.	What is dimension of an array. How many types of array are there? Can you store integer values and float type values in a single array, if not why? What you need to do to store such different types of values in an single array?	**5**	**CO4**
7.	Write an user defined function in c that would return multiple values in main() function.	**5**	**CO3**
8.	Suppose a paragraph is stored in a 2-D character array. Find a specific sentence in that paragraph using a c program.	**5**	**CO2/CO4**
9.	State the types of data types and memory occupies. What are the ways to convert from one data type to another data type with suitable example?	**5**	**CO1**
	SECTION C is Compulsory		
10.	Is it possible to take input in a 2-D array using a single for loop? Make it possible using a suitable program in c.	**10**	**CO4**
11.	Write a program in c to determine that a text is written in English or in any other language. If the text is written in any other language convert every character in its nearest English alphabets.	**10**	**CO4**
12	Write a program to create a pointer to an integer. Allocate memories for 50 elements into that pointer using both malloc() and calloc() function. Display the significance difference of using those two functions to allocate memory. Also state the specific needs of these two functions.	**10**	**CO4**

GEE12002	Electrical and Electronics Technology Lab	L	T	P	C
Version 1.0		0	0	2	1
Pre-requisites/Exposure	Class 12th Level physics				
Co-requisites					

Course Objectives

1. To study basic electronic components
2. To observe characteristics of electronic devices
3. To study basic electrical circuits

Course Outcomes

On completion of this course, the students will be able to

CO1**.** Highlight the use of different meters and instruments for measurement of electronic quantities

CO2. Understand network theorems.

CO3. Examine the characteristics of different semiconductor devices like diode, BJT, FET etc. and carbon tungsten filament lamps experimentally.

CO4. Illustrate the various application circuits using diodes

CO5. Assess the R-L-C circuits

CO6. Compose the three phase circuits

Catalog Description

Present technology requires necessary knowledge of ELECTRONICS in most fields. Avionics, Autotronics, Agrotronics, Physics, Process Chemistry, Health Services, etc., already employ components or even whole systems based on Electronics. Thus, there is an increasing number of professionals in these and many other fields who need adequate knowledge and training. Taken this into account, ADAMAS has developed the Basic Electronics and Electricity Integrated Laboratory, capable of covering different levels of difficulty. It is based on a series of self-taught modules, each one referring to a specific area of Electronics.

Course Content

List of experiments (Electrical Part):

1. Verification of Thevenin's theorem and Norton's theorem.
2. Verification of Superposition theorem.
3. Verification of Maximum power transfer theorem.
4. Study of R-L-C series circuit.
5. Study of R-L-C parallel circuit.
6. Performance study of fluorescent, LED, tungsten and carbon lamps.
7. Measurement of power in a three-phase circuit using two-wattmeter method.

List of experiments (Electronics Part):

1. Familiarization of bread board and electronics elements such as R, L, C, diode, and BJT etc.
2. Familiarization of Function generator and measuring instruments such as CRO and multimeter.
3. Study the V-I characteristic of PN junction diode and find knee voltage.

4. Study the input and output characteristic of bipolar junction transistor (BJT): Common emitter (CE) configuration
5. Study the transfer and drain characteristic of junction field-effect transistor (JFET), hence determine the drain resistance, transconductance factor, amplification factor.
6. Study the transfer and drain characteristic of MOSFET, hence determine the drain resistance, transconductance factor, amplification factor.
7. Realization of digital logic circuit using MOSFET (AND, OR, NOT etc.).

Modes of Evaluation: Quiz/Assignment/ presentation/ Written Examination

Examination Scheme:

Components	Internal Assessment	End Term Examination
Weightage (%)	50	50

Relationship between the Course Outcomes (COs) and Program Outcomes (POs)

Course Code	Course Name	COs	PO1	PO2	PO3	PO4	PO5	PO6	PO7	PO8	PO9	PO10	PO11	PO12	PSO1	PSO2	PSO3
GEE12002	Electrical and Electronics Technology Lab	CO(GEE12002).1	2	2	3	2	1	2	3	-	3	-	-	1			
		CO(GEE12002).2	3	2	3	2	3	3	1	-	3	-	-	2			
		CO(GEE12002).3	3	3	2	1	3	2	2	-	2	-	-	2			
		CO(GEE12002).4	2	2	3	2	1	3	1	-	2	-	-	1			
		CO(GEE12002).5	3	2	3	1	3	2	1	-	3	-	-	1			
		CO(GEE12002).6	2	2	3	2	1	2	3	-	3	-	-	1			
		CO(GEE12002)	3	3	3	2	3	3	3	-	3	-	-	1			

1=weakly mapped
2= moderately mapped
3=strongly mapped

Name: **Enrolment No:**	ADAMAS UNIVERSITY PURSUE EXCELLENCE

Course: GEE12002 – Electrical & Electronics Technology Lab

Program: B.Tech. **Semester: ODD 2020-21**

Time: 03 hrs. **Max. Marks: 40**

SAMPLE QUESTIONS

1.	**A)** Draw the forward V-I Characteristic curve of p-n junction diode with proper circuit connection and also find out the knee voltage. **B)** Explain the mechanism of drift & diffusion of carriers.	**[20]**	**CO3**
2.	**A)** Draw and compare the input characteristics of BJT with proper circuit connection (in common emitter configuration) with three different V_{CE} values. **B)** What are the differences between BJT & FET? Explain thermal runway	**[20]**	**CO2**
3.	**A)** Draw and compare the output characteristics of BJT with proper circuit connection (in common emitter configuration) with three different I_B values. **B)** What do you mean by pinch-off voltage? Derive the relationship between α, β and γ.	**[20]**	**CO2**
4.	**A)** Draw and compare the drain characteristics of FET with proper circuit connection with three different V_{GS} values (0v, -1v & -2v). **B)** Define the following terms of a FET with mathematical expressions: **i)** Trans conductance (g_m), **ii)** Drain resistance (r_d).	**[20]**	**CO2**
5.	**A) i)** Calculate the various resistance values using colour code and compare with measured values. **ii)** Measure the forward & reverse resistance of various diodes. **iii)** Identify the pnp & npn transistors and find out the different terminals. **B)** What are the differences between intrinsic and extrinsic semiconductor? Write approximate value of cut-in voltage for Si and Ge diode.	**[20]**	**CO1**
6.	**A)** Observe the different signals (Sine, Square & Triangle) using function generator and measure the amplitude and frequency of each signal. **B)** Draw and explain the common emitter transistor circuit and output characteristics.	**[20]**	**CO2**
7.	**A)** Verify Thevenin's, Norton's, Superposition and Maximum power transfer theorem. **B)** What is load matching? **C)** To what type of circuit Thevenin's theorem is applicable? **D)** What is the use of Thevenin's theorem?	**[20]**	**CO1**

8.	**A)** Calculate the resistance, inductance and capacitance for series and parallel RLC circuit using ammeter and voltmeter reading. **B)** Calculate power factor for RLC series circuit.	**[20]**	**CO4**
9.	**A)** What is the nature (i.e. positive or negative) of the slop of the voltage vs. Resistance characteristics of Tungsten Filament Lamp? Explain it briefly. **B)** What is the function of starter? What is the function of choke?	**[20]**	**CO2**
10.	**A)** How many coils are there in a single in a single phase wattmeter? **B)** Which type of wattmeter is generally used for measuring power in a.c. circuits? **C)** What do you understand by phase sequence in reference to 3-phase circuits? **D)** In a star connected 3-phase balanced load with neutral available, how many wattmeters are necessary to measure power?	**[20]**	**CO5**

CEE12001	Engineering Drawing and CAD	L	T	P	C
Version 1.0		0	0	4	2
Pre-requisites/Exposure					
Co-requisites					

Course Objectives

1. To comprehend general projection theory, with an emphasis on the use of orthographic projection to represent three-dimensional objects in two-dimensional views.
2. To understand the application of industry standards and techniques applied in engineering drawing.
3. To apply auxiliary or sectional views to most practically represent engineered parts.
4. To Dimension and annotate two-dimensional engineering drawings.
5. To employ freehand 3D pictorial sketching to aid in the visualization process and to efficiently communicate ideas graphically.

Course Outcomes

On completion of this course, the students will be able to

CO1: Remember the conventions of engineering graphics such as types of lines, dimensioning, method of projection etc.

CO2: Demonstrate understanding of fundamental concepts of engineering graphics.

CO3: Apply knowledge of orthographic and isometric projections to solve problems related to points, lines, planes and solids.

CO4: Develop and model basic mechanical components.

CO5: Review the drawings made in various types of projection methods.

CO6: Create 2D drawing of solid objects.

Catalog Description

In this fundamental course, students will be introduced to the basics of engineering drawing. Terms and definitions used in industries, such as manufacturing and construction, may also be covered. Specific skills introduced in this course may include sketching, geometric construction, auxiliary drawing, computing dimensions and lettering. Students will be also introduced to computer-aided drawing (CAD) software or techniques.

Course Content

Module 1 **Contact Hr. 9**

Introduction to Engineering Drawing covering, Principles of Engineering Graphics and their significance, usage of Drawing instruments, lettering, Conic sections including the Rectangular Hyperbola (General method only); Cycloid, Epicycloid, Hypocycloid and Involute; Scales – Plain, Diagonal and Vernier Scales.

Module 2 **Contact Hr. 9**

Orthographic Projections covering, Principles of Orthographic Projections Conventions - Projections of Points and lines inclined to both planes; Projections of planes inclined Planes - Auxiliary Planes.

Module 3 **Contact Hr. 8**

Projections of Regular Solids covering, those inclined to both the Planes- Auxiliary Views.

Module 4 **Contact Hr. 9**

Sections and Sectional Views of Right Angular Solids covering, Prism, Cylinder, Pyramid, Cone – Auxiliary Views; Development of surfaces of Right Regular Solids - Prism, Pyramid, Cylinder and Cone.

Module 5 **Contact Hr. 10**

Isometric Projections covering, Principles of Isometric projection – Isometric Scale, Isometric Views, Conventions; Isometric Views of lines, Planes, Simple and compound Solids; Conversion of Isometric Views to Orthographic Views and Vice-versa, Conventions

Reference Books

1. Engineering Drawing, N. D. Bhat, Charotar Publishing House (2012).
2. Shah, M.B. & B.C. Rana (2008), Engineering Drawing and Computer Graphics, Pearson Education.
3. Engineering Drawing & Graphics using Autocad, T. Jeyapoovan, Vikas Publishing House Pvt. Ltd.-Noida; Third edition (2010).
4. https://nptel.ac.in/courses/112103019/

Modes of Evaluation: Quiz/Assignment/ Written Examination
Examination Scheme:

Components	**Class Assessment**	**End Term Examination**
Weightage (%)	**50**	**50**

Relationship between the Course Outcomes (COs) and Program Outcomes (POs)

Course Code	Course Name	COs	PO1	PO2	PO3	PO4	PO5	PO6	PO7	PO8	PO9	PO10	PO11	PO12	PSO1	PSO2	PSO3
CEE12001	Engineering Drawing and CAD	CO(CEE12001).1	2				1	1	1	1		1		1	3	3	
		CO(CEE12001).2	2				1	1	1	1		1		1	3	3	
		CO(CEE12001).3	2		3		1	1	1	1		1		1	3	3	
		CO(CEE12001).4		3	3	2	1	1	1	1		1		1	3	3	
		CO(CEE12001).5			3	2	1	1	1	1		1		1	3	3	
		CO(CEE12001).6			3	2	1	1	1	1		1		1	3	3	
		CO(CEE12001)	2	3	3	2	1	1	1	1		1		1	3	3	

1=weakly mapped
2= moderately mapped
3=strongly mapped

Model Question Paper

Name: **Enrolment No:**	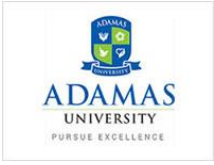

Course: CEE12001 – Engineering Drawing and Cad

Program: B.Tech. (CE) **Semester: 1st**

Time: 03 Hrs. **Max. Marks: 40**

Instructions:

Attempt All Questions from **Section A** (Each Carrying 1 Marks); **Three Questions** from **Section B** (Each Carrying 5 Marks)**. Two Questions from Section C** (Each Carrying 10 Marks)**.**

	Section A (attempt all)		
1.	What are different methods are available for the construction of Ellipse? (1)	**1**	**CO2**
2.	What is the purpose of using Dashed thick line? (1)	**1**	**CO1**
3.	If we are using Gothic Style double lettering then what should be the dimension of M in mm? (1)	**1**	**CO1**
4.	Define Involute. (1)	**1**	**CO2**
5	The Offset tool should only be used for placing _____ in an isometric drawing. (1)	**1**	**CO5**
	SECTION B (Attempt any **Two Questions)**		
6.	The top view of a 75 mm long line AB measures 65 mm, while the length of its F.V. is 50 mm. Its one end A is in the H.P. and 12 mm in front of V.P. Draw the projections of line AB.	**5**	**CO3**
7.	A line MP 40 mm long is parallel to HP and inclined at an angle 35° to VP. The end M is 20 mm above HP and 25 mm in front of VP. Draw the projection of the line	**5**	**CO2**
8.	With a simple sketch explain revolved section.	**5**	**CO5**
	SECTION C is Compulsory		
9.	A cylinder 60 mm base diameter and 70 mm length of axis is resting on its base in the H.P. It is tilted on one of its base point in such a way that the generator passing through that point makes an angle of 45 deg with the H.P. and is parallel to V.P. Draw its projections.	**10**	**CO3**
10.	A circle of 50 mm diameter rolls on the circumference of another circle of 150 mm diameter & outside it. Trace the locus of a point on the circumference of the rolling circle for one complete revolution. Draw a tangent & normal to the curve at a point 85 mm from the centre of the directing circle.	**10**	**CO2**

MEE12001	**Engineering Workshop**	L	T	P	C
Version 1.0		0	0	4	2
Pre-requisites/Exposure	12th level Physics, Engineering Mechanics				
Co-requisites	--				

Course Objectives:

1. To develop a skill in dignity of labour, precision, safety at work place, team working and development of right attitude.
2. To acquire skills in basic engineering practice
3. To identify the hand tools and instruments
4. To gain measuring skills
5. To develop general machining skills in the students

Course Outcomes:

On completion of this course, the students will be able to

CO1 Identifying the basic operations in pattern and mould making
CO2 Understanding different metal fitting works
CO3 Examining basic forging and welding works
CO4 Illustrating the operations of machine tools
CO5 Reviewing the appropriate tools required for specific operation
CO6 Adapting the safety measures required to be taken while using the tools

Catalog Description:

Engineering Workshop is a place where students acquire knowledge on the operation of various processes involved in manufacturing and production. The Workshop Practice course makes students competent in handling practical work in engineering environment. Students will be expected to be familiar with engineering problems related to practical field.

Course Content

List of Experiments (Any ten)	
1	To make a single piece pattern from the given work piece and dimensions.
2	To make a double piece match pattern from the given dimensions.
3	To make a single piece cylindrical (solid) pattern from the given dimensions.
4	To make a cone from sheet metal as per given dimensions.
5	To make a frustum from sheet metal as per given dimensions.
6	To prepare a sand mold, given the single piece pattern and casting.
7	To prepare a sand mold, given the double piece match pattern and casting with different dimensions and shape
8	To make a square fitting from the given mild steel piece and the dimensions.
9	To make a square fitting from the given mild steel piece and the dimensions.
10	To make a single 'V' butt joint between two metal plates by using ARC welding.
11	To make a square butt joint between metal plates by using gas welding.
12	To perform various types of machining operations (cantering, facing and turning) on a given mild steel rod followed by the given dimensions.
13	To perform various types of machining operations (chamfering, grooving, thread cutting, and knurling) on a given mild steel rod followed by the given dimensions.

Reference Books

1. Workshop Technology by S.K. Garg, 3rd Edition, LP

Modes of Evaluation: Quiz/Assignment/ presentation/ extempore/ Written Examination
Examination Scheme:

Components	Class Assessment	End Term
Weightage (%)	50	50

Relationship between the Course Outcomes (COs) and Program Outcomes (POs)

Course Code	Course Name	COs	PO1	PO2	PO3	PO4	PO5	PO6	PO7	PO8	PO9	PO10	PO11	PO12	PSO1	PSO2	PSO3
MEE 12001	Engineering Workshop	CO(MEE 12001).1	2				1	1	1	1		1		1	3		
		CO(MEE 12001).2	2				1	1	1	1		1		1	3		
		CO(MEE 12001).3	2		3		1	1	1	1		1		1	3		
		CO(MEE 12001).4		3	3	2	1	1	1	1		1		1	3		
		CO(MEE 12001).5			3	2	1	1	1	1		1		1	3		
		CO(MEE 12001).6			3	2	1	1	1	1		1		1	3		
		CO(MEE 12001)	2	3	3	2	1	1	1	1		1		1	3		

1=weakly mapped,
2= moderately mapped,
3=strongly mapped

Model Question Paper

ADAMAS UNIVERSITY
SCHOOL OF ENGINEERING AND TECHNOLOGY
END-SEMESTER EXAMINATION: JULY 2020

Name of the Program: B.Tech — Semester: II/I
Stream: CE/ME/CSE/ECE/EE
PAPER TITLE: Engineering Workshop — PAPER CODE: MEE12001
Maximum Marks: 40 — Time duration: 3 hours
Total No of questions: 12 — Total No of Pages: 01

Instruction for the Candidate:

1. At top sheet, clearly mention Name, Univ. Roll No., Enrolment No., Paper Name & Code, Date of Exam.
2. All parts of a Question should be answered consecutively. Each Answer should start from a fresh page.
3. Assumptions made if any, should be stated clearly at the beginning of your answer.

	Section A (Answer All the Questions) (5 x 1 = 5)		
1.	Discuss advantages and limitations of Gas welding.	**U**	**CO3**
2.	Write the steps involved in making a mold	**U**	**CO1**
3.	Describe the various types of pattern with neat sketch.	**R**	**CO1**
4.	Describe the specification of lathe machine.	**R**	**CO4**
5.	Discuss advantages and limitations of Gas welding.	**U**	**CO3**
	SECTION B (Attempt any **Three Questions) (3 x 5 = 15)**		
4.	Describe the function of main parts of lathe machine. List some of the operation that can be done on the lathe machine and perform any one operation in lathe machine	**U**	**CO4**
5.	To make a single piece cylindrical (solid) pattern from the given dimensions.	**Ap**	**CO1**
6.	To make a square fitting from the given mild steel piece and the dimensions.	**Ap**	**CO2**
7.	Short note of Turning, Facing, Runner.	**Evaluate**	**CO4 /CO5**
	SECTION (Answer Any Two Questions) (2 x 10 = 20)		
8.	To make a single 'V' butt joint between two metal plates by using ARC welding.	**U**	**CO3**
9.	Describe the various types of allowance in molding operation.	**Create**	**CO1**

MTH11502	Engineering Mathematics II	L	T	P	C
Version 1.0		3	1	0	4
Pre-requisites/Exposure	12th level Mathematics & Engineering Mathematics I				
Co-requisites	--				

Course Objectives

1. To help the student to understand the basic concepts of matrix theory with its uses in engineering science.
2. To give emphasis about concepts of Eigen value and Eigen vector, vector space and linear transformation and enable students to apply these topics for analysing engineering problems.
3. To help the student to understand the use of vector calculus in engineering.
4. To give the students a perspective to learn about functions of complex variables, pole, and residues and their importance in advanced study of engineering science.
5. To enable students to acquire the knowledge of different transformation techniques and their applications in engineering science.

Course Outcomes

On completion of this course, the students will be able to

CO1	Highlight the knowledge of matrix theory for finding solution of a related engineering problem
CO2	Express the Eigen value(s) and Eigen vector(s) of a matrix
CO3	Apply the concept of vector space and linear transformation between the vector spaces
CO4	Analyze the knowledge of vector calculus and apply it for solving related problems
CO5	Evaluate the concept of complex variable and its application
CO6	Compose transformation technique for solving differential equation or difference equation

Course Description

For any engineering program, Mathematics is the backbone. With a sound knowledge in fundamental mathematics, an engineering student can become a very skillful engineer. In this course, the focus will be on learning Mathematics in depth, which will motivate students to grow their thinking ability in different fields of engineering. Students will be able to apply this knowledge to tackle almost all kinds of problems in engineering and science successfully. Class participation is a fundamental aspect of this course. Students will be encouraged to actively take part in all group activities (Problem solving, presentation etc.).

Course Content

Unit- I **[18]**

Linear Algebra: Elementary row and column operations on a matrix, Rank, echelon form, normal form, Inverse of a matrix using elementary operations, solution of system of algebraic equation, consistency, Caley-Hamillton theorem, eigenvalues and eigenvectors, Symmetric and skew-symmetric matrices, orthogonal matrices, complex matrices, Hermitian and skew-Hermitian matrices, algebraic and geometric multiplicity, diagonalization, vector spaces, linear dependence of vectors, basis, linear transformations.

Unit- II **[14]**

Vector Calculus: Ordinary Integrals of Vectors, Multiple integrals, Jacobian, Line, surface and volume integrals of Vector fields, Gauss' divergence theorem, Green's and Stokes Theorems and their applications.

Complex Variables: Limit, continuity, differentiability and analyticity of functions, Cauchy-Riemann equations, line integrals in complex plane, Cauchy s integral theorem, independence of path, existence of indefinite integral, Cauchy's integral formula, derivatives of analytic functions, Taylor's series, Laurent's series, zeros and singularities, Residue theorem, evaluation of real integrals.

Unit- III **[10]**

Fourier Series: Periodic functions, Definition of Fourier series, Euler's formulae, Dirichlet conditions, Change of interval, Even and odd functions, half range Fourier Sine & Cosine series.

Unit-IV **[18]**

Introduction to Transform Calculus: Introduction to Laplace transform and its properties (without proof), Inverse Laplace transform, Definition of Fourier integrals, Fourier Sine & Cosine integrals, complex form of Fourier integral, Fourier sine & cosine transforms, inverse Fourier transform, introduction to Z- Transform and its properties, Inverse Z- Transform, Inverse Z- transform by partial fraction and residue methods.

References:

1. Erwin Kreyszig, Advanced Engineering Mathematics, John Wiley and Sons
2. B.V. Ramana, Higher Engineering Mathematics, Tata McGraw-Hill
3. David C. Lay, Linear algebra and its application, (Latest edition), Pearson publication, New Delhi
4. B. S. Grewal, Higher Engineering Mathematics, Khanna Publications
5. C B Gupta, S R Singh, and Mukesh Kumar, Engineering Mathematics, Mc Graw Hill Publication
6. R. K. Jain and S. R. K. Iyengar, Advanced Engineering Mathematics, Narosa Publishing House

Modes of Evaluation: Quiz/Assignment/ presentation/ extempore/ Written Examination

Examination Scheme:

Components	Class Assessment	End Term Examination
Weightage (%)	50	50

Relationship between the Course Outcomes (COs) and Program Outcomes (POs)

Course Code	Course Name	COs	PO1	PO2	PO3	PO4	PO5	PO6	PO7	PO8	PO9	PO10	PO11	PO12	PSO1	PSO2	PSO3
MTH 11502	Engineering Mathematics-II	CO(MTH 11501).1	3	2	-	-	2	-	-	-	-	-	-	-	-	-	-
		CO(MTH 11501).2	3	2	-	-	2	-	-	-	-	-	-	-	-	-	-
		CO(MTH 11501).3	3	2	-	-	2	-	-	-	-	-	-	-	-	-	-
		CO(MTH 11501).4	3	2	-	-	2	-	-	-	-	-	-	-	-	-	-
		CO(MTH 11501).5	3	2	-	-	2	-	-	-	-	-	-	-	-	-	-
		CO(MTH 11501).6	3	2	-	-	2	-	-	-	-	-	-	-	-	-	-
		CO(MTH 11501)	3	2	-	-	2	-	-	-	-	-	-	-	-	-	-

1 = weakly mapped

2 = moderately mapped,

3 = strongly mapped

Model Question Paper

ADAMAS UNIVERSITY
SCHOOL OF ENGINEERING AND TECHNOLOGY

END-SEMESTER EXAMINATION: JULY 2020

Name of the Program: B. Tech Semester: II Stream: All
PAPER TITLE: Engineering Mathematics II
PAPER CODE: MTH11502
Maximum Marks: 40 Time duration: 3 hours
Total No of questions: 12 Total No of Pages: 02

Instruction for the Candidate:

1. At top sheet, clearly mention Name, Univ. Roll No., Enrolment No., Paper Name & Code, Date of Exam.
2. All parts of a Question should be answered consecutively. Each Answer should start from a fresh page.
3. Assumptions made if any, should be stated clearly at the beginning of your answer.

Section A (Answer All the Questions) (5 x 1 = 5)

1.	Calculate the inverse z-transform of the function $F(z) = \frac{1}{z-2}$.	**Ap**	**CO07**
2.	Find the polar form of $-1 + i$.	**Ap**	**CO05**
3.	What is the Laplace transform of $f(t) = t^2 e^{-at}$?	**Ap**	**CO07**
4.	Write down the Fourier series representation for an odd function $f(x)$ in the interval $-\pi \leq x \leq \pi$.	**U**	**CO06**
5.	If $A = \begin{pmatrix} 0 & 2 \\ 0 & 4 \end{pmatrix}$, Write A as a sum of a symmetric and skew symmetric matrices.	**Ap**	**CO01**
	SECTION B (Attempt any **Three Questions) (3 x 5 = 15)**		
6.	Verify Cayley-Hamilton theorem for $A = \begin{pmatrix} 0 & 0 & 1 \\ 3 & 1 & 0 \\ -2 & 1 & 4 \end{pmatrix}$.	**U, Ap**	**CO01 & CO02**
7.	Determine the Fourier sine integral representation of $f(x) = \begin{cases} 1 & for\ 0 \leq x \leq \pi \\ 0 & for\ \ x > \pi \end{cases}$ and hence evaluate $\int_0^\infty \frac{1-\cos \pi\lambda}{\lambda} \sin \lambda x \, d\lambda$.	**U**	**CO06**
8.	Define Harmonic function. Prove that $H(x,y) = e^{-y} Sin\, x$ is a harmonic function.	**Ap**	**CO05**
9.	Find the inverse Z-transform of $F(z) = \frac{(3z^2 - z)}{(z-2)(z-3)(z-4)}$, using partial fraction method.	**Ap**	**CO07**
	SECTION (Answer Any Two Questions) (2 x 10 = 20)		
10.	(i) Determine the analytic function $f(z) = u + iv$, if $u = e^x(x\, Cosy - y \sin y)$. (ii) Evaluate the line integral $\int_i^{2-i} (3xy + iy^2) dz$ along the line $x + y = 1$. **5+5**	**Ap**	**CO04 & CO05**
11.	(i) Evaluate the integration using Residue theorem $\int_c \frac{dz}{(z-1)(z-2)(z-3)}$ where $c: \lvert z \rvert = \frac{5}{2}$ (ii) Compute the Laplace transform of the following function $f(t) = \frac{e^{-at} - cosbt}{t}$ **5+5**	**U, Ap**	**CO05 & CO06**
12.	(i) Let V be the set of all ordered pairs of real numbers with vector addition defined as $(x,y) + (x',y') = (x + x' + 1, y + y' + 1)$ Show that the first five axioms for vector addition are satisfied. Clearly mention the zero vector and additive inverse. (ii) Summarize the conditions for which the system $x + y + z = 1$ $x + 2y - z = k$ $5x + 7y + az = k^2$ Admits (i) No solution (ii) Only one solution (iii) Infinitely many solution. **5+5**	**U**	**CO3**

MEE11002	Engineering Mechanics	L	T	P	C
Version 1.0		2	1	0	3
Pre-requisites/Exposure	12th level Physics, Mathematics				
Co-requisites	--				

Course Objectives

1. To enable learners to solve force problems related to practical world.
2. To be able to determine the centroid, centre of gravity and moment of inertia.
3. To learn the effect of friction on equilibrium.
4. To learn kinematics, kinetics of particle and rigid body, related principles.
5. To introduce the concepts of Dynamic motion.

Course Outcomes

On completion of this course, the students will be able to

1. Define conditions of equilibrium of bodies subjected to forces
2. Express the centroid, centre of gravity and moment of inertia of various one dimensional and two dimensional objects
3. Determine motion under the effect of dry friction
4. Explain the concept of virtual work for bodies in equilibrium
5. Review the D'Alembert's Principle for reducing the problem of kinetics to equivalent statics problem.
6. Solve the problems related to statics and dynamics

Catalog Description

Engineering Mechanics. This is a basic first level course to learn rigid body mechanics covering both statics and dynamics. Statics covers free body diagrams, equilibrium of rigid bodies, analysis of trusses and beams, discussion on friction, virtual work and stability. Students will be expected to be familiar with engineering problems related to practical field.

Course Content

Module 1 11 lecture hours

Basics of Statics and Concurrent Forces

Statics of Particles: Force System: Force, classification & representation, force as a vector, composition and resolution of forces, principle of superposition and transmissibility of forces.

Statics of Rigid bodies: Equilibrium of coplanar force system, free body diagrams, determination of reactions, equilibrium of a body under three forces, Lami's theorem. Moment of a force about a point and an axis, moment of coplanar force system, Varignan's theorem.

Module 2: 11 lecture hours

Parallel and Distributed Forces

Parallel forces in a plane, Distributed Parallel forces in a plane, couple, resolution of a force into a force and a couple, moment of a couple.

Centroid and Moment of Inertia: Determination of centre of gravity, centre of mass and centroid by direct integration and by the method of composite bodies, area moment of inertia of composite plane figures and mass moment of inertia, radius of gyration, parallel axis theorem, Pappas theorems, polar moment of inertia.

Module 3: 6 lecture hours

Friction Introduction to wet and dry friction, laws of dry friction, cone of friction, block friction, ladder friction, wedge friction, application of friction in machines.

Module 4: 4 lecture hours

Virtual Work Virtual displacement, principle of virtual work.

Module 5: 8 lecture hours

Introduction to Dynamics Laws of motion, Projectile motion, D'Alembert's Principle, Work and energy, impulse and momentum, impact of bodies.

Text Books

1. Engineering Mechanics [Vol-I & II] by Meriam&Kraige, 5th ed. – Wiley India
2. Engineering Mechanics by S.S. Bhavikatti and K.G. Rajashekarappa – New Age International
3. Mechanics of Solids by Crandall,Dahl and Sivakumar-MC Graw Hill ,5th Edition 2015,New Delhi

Reference Books

1. Engineering Mechanics: Statics & Dynamics by I.H.Shames, 4th ed. – PHI
2. Engineering Mechanics by Timoshenko, Young and Rao, Revised 4th ed. – TMH

Modes of Evaluation: Quiz/Assignment/ presentation/ extempore/ Written Examination
Examination Scheme:

Components	Class Assessment	End Term
Weightage (%)	50	50

Relationship between the Course Outcomes (COs) and Program Outcomes (POs)

Course Code	Course Name	COs	PO1	PO2	PO3	PO4	PO5	PO6	PO7	PO8	PO9	PO10	PO11	PO12	PSO1	PSO2	PSO3
MEE 11002	Engineering Mechanics	CO(MEE 11002).1	2				1	1	1	1		1		1		3	
		CO(MEE 11002).2	2				1	1	1	1		1		1		3	
		CO(MEE 11002).3	2		3		1	1	1	1		1		1		3	
		CO(MEE 11002).4		3	3	2	1	1	1	1		1		1		3	
		CO(MEE 11002).5			3	2	1	1	1	1		1		1		3	
		CO(MEE 11002).6			3	2	1	1	1	1		1		1		3	
		CO(MEE 11002)	2	3	3	2	1	1	1	1		1		1		3	

1=weakly mapped
2= moderately mapped
3=strongly mapped

Model Question Paper

ADAMAS UNIVERSITY
SCHOOL OF ENGINEERING AND TECHNOLOGY
END-SEMESTER EXAMINATION: JULY 2020

Name of the Program: B.Tech — Semester: II
Stream: CE/ME/EE/CSE/ECE
PAPER TITLE: Engineering Mechanics — PAPER CODE: MEE11002
Maximum Marks: 40 — Time duration: 3 hours
Total No of questions: 12 — Total No of Pages: 01

Instruction for the Candidate:

1. At top sheet, clearly mention Name, Univ. Roll No., Enrolment No., Paper Name & Code, Date of Exam.
2. All parts of a Question should be answered consecutively. Each Answer should start from a fresh page.
3. Assumptions made if any, should be stated clearly at the beginning of your answer.

	Section A (Answer All the Questions) (5 x 1 = 5)		
1.	State the Parallelogram Law of forces.	**U**	**CO1**
2.	Explain: Varignon's principle of moments	**U**	**CO1**
3.	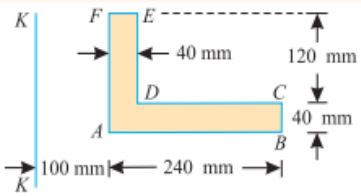 Compute the moment of inertia of the above area about axis K-K.	**R**	**CO2**
4.	Find the centroid of an unequal angle section 100 mm × 80 mm × 20 mm. 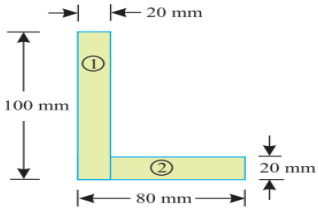	**R**	**CO2**
5.	What is friction?	**U**	**CO3**
	SECTION B (Attempt any **Three Questions) (3 x 5 = 15)**		
4.	a) Explain principle of transmissibility? (b)Find out the reaction forces at support as shown in figure below using principle of virtual work.	**U**	**CO1**

	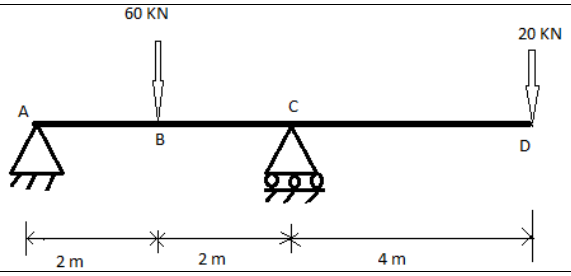		
5.	(a) Derive the moment of inertia of perpendicular axis theorem (b) An I-section is made up of three rectangles as shown in Figure below. Find the moment of inertia of the section about the horizontal axis through the CG and parallel to the X-X axis. 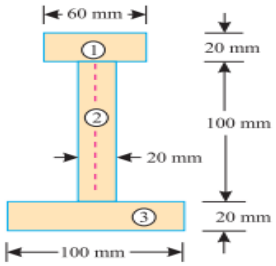	**Ap**	**CO2**
6.	(a) Explain Laws of friction? (b) An effort of 200 N is required just to move a certain body up an inclined plane of angle 15° with the force acting parallel to the plane. If the angle of inclination of the plane is made 20° the effort required, again applied parallel to the plane, is found to be 230 N. Find the weight of the body and the coefficient of friction.	**Ap**	**CO3**
7.	a) Explain principle of transmissibility? (b)Find out the reaction forces at support as shown in figure below using principle of virtual work. 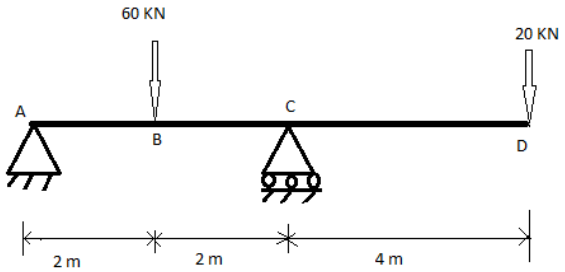	**Evaluate**	**CO1 /CO4**
	SECTION (Answer Any Two Questions) (2 x 10 = 20)		
8.	An electric light fixture weighting 15 N hangs from a point C, by two strings AC and BC. The string AC is inclined at 60° to the horizontal and BC at 45° to the horizontal as shown in Figure. Using Lami's theorem, determine the forces in the strings AC and BC. 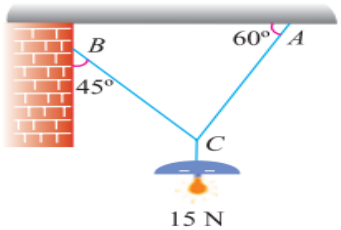	**U**	**CO1**
9.	A horizontal line PQRS is 12 m long, where PQ = QR = RS = 4 m. Forces of 1000 N, 1500 N, 1000 N and 500 N act at P, Q, R and S respectively with downward direction. The lines of action of these forces make angles of 90°, 60°, 45° and 30° respectively with PS. Find the magnitude, direction and position of the resultant force	**Create**	**CO1**

	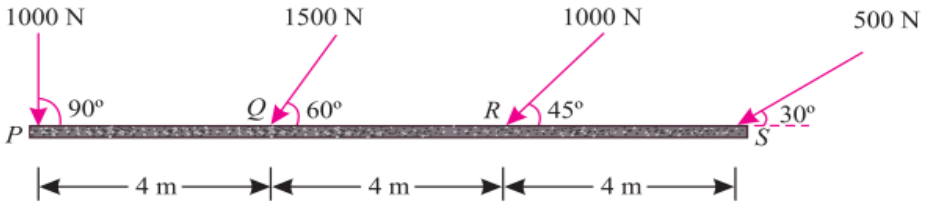		
10.	2. Two blocks A and B of weights 1 kN and 2 kN respectively are in equilibrium position as shown in Figure 1. If the coefficient of friction between the two blocks as well as the block B and the floor is 0.3,find the force 'P' required to move the block B. (5) 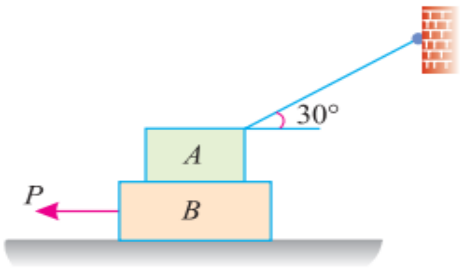	**An**	**CO3**

EVS11112	Environmental Science	L	T	P	C
Version 1.1	Contact Hours – 45	3	0	0	3
Pre-requisites/Exposure	Basic physics, chemistry, mathematics of +2 level.				
Co-requisites	--				

Course Objectives

1. To understand the intrinsic relation between humans and environment, our position in the ecosystem around us
2. To comprehend the significance of the biodiversity surrounding us.
3. To figure out the importance and need for energy resources, various sources of energy, renewable and non-renewable sources, conventional and unconventional sources.
4. To have basic concepts about sustainability, our dependence on nature and the consequences of overexploitation.
5. To enable students to appreciate the importance and how much we owe to the earth systems for our survival.
6. To have a basic concept about the types of pollution and mitigation procedures.
7. To have an overall idea about the environmental legal framework in our country and about the EIA and environmental audit procedures.

Course Outcomes

On completion of this course, the students will be able to

CO 1: Distinguish between various types of ecosystems, ecosystem dynamics, perceive and appreciate the surrounding nature.
CO 2: Feel connected with the intrinsic relation between humans and environment, our position in the ecosystem around us, and importance of biodiversity.
CO 3: Comprehend the presence of various pollutants, their significance, and impacts, and develop the underlying concepts involved in various air pollution prevention and mitigation measures.
CO 4: Understand the basic science which can explain the phenomena occurring around us.
CO 5: Build the in-depth knowledge about natural resources including energy resource.
CO 6: Understand the legal framework in our country for safeguarding the environment including pollution prevention, control, management, and wildlife management.

Catalog Description

To distinguish between various types of ecosystems, ecosystem dynamics, perceive and appreciate the surrounding nature and feel connected, develop the concept of innate relationship of humans and biodiversity, need for conservation and different conservation strategies. The students will be developed in a way so that they can spontaneously comprehend the importance of studying about the various air pollutants, their significance and impacts, and develop the underlying concepts involved in various air pollution prevention and mitigation measures, understand fundamental water chemistry, deduce the relationship between various water pollutants, and understand the principles of various water and wastewater treatment procedures. They will understand the routes of generation, classification, management and environmental significance of solid waste, apply the basic concepts of waste management in their daily lives, understand the need of the 5Rs of waste management, importance of waste minimization.

Course Content

Module 1: Basics of Environmental Sciences: (5 hrs)

Definition, Scope and objectives, classification of environment, interrelationship between the components, ecology and ecosystem, structural and functional component of ecosystem, energy flow in an ecosystem, biogeochemical cycles, human impact on the environment, The IPAT equation, Ecological foot print, ecology and environment, ecosystem concept, energy flow in an ecosystem.

Module 2: Energy Resources: (10 hrs)

Concept of energy, SI Units of Work, Heat and Power, World energy use, Energy consumption pattern in India and U.S., Environmental aspects of energy utilization Renewable and non-renewable sources; Fossil fuel: types, use and environmental impacts, Solar energy: Solar Radiation – Passive and active solar systems – Flat Plate and Concentrating Collectors – Solar direct Thermal Application– Fundamentals of Solar Photo Voltaic Conversion- advantages and disadvantages of Solar Power generation, Solar energy status in India, Wind Energy: site selection, Wind turbine: basic working principle and types, Wind energy status in India, advantages and disadvantages of Wind Power generation, Hydroelectric power : How it is generated, advantages and disadvantages, Biomass energy: various types, generations of biofuel, Biomass direct combustion – Biomass gasifiers – Biogas plants – Digesters – Ethanol production – Bio diesel, Geothermal Energy: source, various methods of extraction: wet steam, dry steam and hot water flashed, advantages and disadvantages

Module 3: Air Pollution and Control: (10 hrs)

Classification of air pollutants, Criteria air pollutants and their impacts, Major global impacts of air pollution on man: Global warming, Ozone layer depletion, Acid rain; Air quality standards, Air pollution control methods, Methods of reducing air pollutants from IC engines, particulate pollutant and gaseous pollutant.

Module 4: Water Pollution Fundamentals and Control Strategies: (5 hrs)

Water quality: physical, chemical and biological characteristics, drinking water quality standard, effluent water quality, waste water sources and constituents, waste water treatment: preliminary treatment, primary treatment, secondary treatment, sedimentation, coagulation, floatation, aerobic and anaerobic biological treatment, activated sludge process, lagoons, trickling filters, rotating biological contractor.

Module 5: Solid Waste Management: (5 hrs)

Sources and generation of solid wastes, their characterization, chemical composition and classification. Different methods of disposal and management of solid wastes, Recycling of waste material. Waste minimization technologies.Hazardous Wastes Management and Handling Rules, 1989

Module 6: Environmental Impact Assessment: (5 hrs)

Introduction to Environmental Impact Analysis.Environmental Impact Statement and Environmental Management Plan.EIA guidelines 1994, Notification of Government of India.Impact Assessment Methodologies.Generalized approach to impact analysis.Procedure for reviewing Environmental impact analysis and statement. Guidelines for Environmental audit.

Text Books:

W.P. Cunningham and M. A. Cunningham, Principles of Environmental Science, 3rd Ed., McGraw-Hill Higher Education, 2005.

Mackenzie Davis and David Cornwell, Introduction to Environmental Engineering (The McGraw-Hill Series in Civil and Environmental Engineering), 2ndEd., McGraw Hill Education, 2012.

Reference Books:

Gilbert M. Masters and Wendell P. Ela, Introduction to Environmental Engineering and Science, 3rd Ed., Prentice Hall India Learning Private Limited, 2008.

Metcalf and Eddy, Wastewater Engineering: Treatment and Reuse, 4thEd., McGraw Hill Education, 2002.

Modes of Evaluation: Quiz/Assignment/ presentation/ extempore/ Written Examination
Examination Scheme:

Components	Class Assessment	End-Term Examination
Weightage (%)	50	50

Relationship between the Course Outcomes (COs) and Program Outcomes (POs)

Course Code	Course Name	COs	PO1	PO2	PO3	PO4	PO5	PO6	PO7	PO8	PO9	PO10	PO11	PO12	PSO1	PSO2	PSO3
EVS11112	Environmental Science	CO(EVS11112).1	-	2	2	-	-	2	-	-	-	-	-	-	-	-	-
		CO(EVS11112).2	2	-	3	-	-	3	1	-	-	-	-	-	-	-	-
		CO(EVS11112).3	-	3	-	-	-	1	3	-	-	-	1	-	-	-	-
		CO(EVS11112).4	1	-	1	-	-	1	3	-	-	-	-	-	-	-	-
		CO(EVS11112).5	2	-	3	-	-	3	1	-	-	-	-	-	-	-	-
		CO(EVS11112).6	1	-	1	-	-	1	3	-	-	-	-	-	-	-	-
		CO(EVS11112)	2	3	3	-	-	3	3	-	-	-	1	-	-	-	-

1=weakly mapped
2= moderately mapped
3=strongly mapped

Model Question Paper

ADAMAS UNIVERSITY
SCHOOL OF ENGINEERING AND TECHNOLOGY

END-SEMESTER EXAMINATION: JULY 2021

Name of the Program: B.Tech — Semester: II
Stream: CSE
PAPER TITLE: Environmental Studies — PAPER CODE: EVS11107
Maximum Marks: 40 — Time duration: 3 hours
Total No of questions: 12 — Total No of Pages: 02

Instruction for the Candidate:

1. At top sheet, clearly mention Name, Univ. Roll No., Enrolment No., Paper Name & Code, Date of Exam.
2. All parts of a Question should be answered consecutively. Each Answer should start from a fresh page.
3. Assumptions made if any, should be stated clearly at the beginning of your answer.

	Section A (Answer All the Questions) (5 x 1 = 5)		
1.	Briefly **evaluate** what information about any ecosystem are conveyed by ecological pyramids?	**U**	**CO1**
2.	**Analyse** how DO of a water body is related to eutrophication?	**U**	**CO3**
3.	**What** are the diverse applications of solar energy unlike other renewable energy resources?	**R**	**CO4**
4.	**What** are the different types of wind turbine?	**R**	**CO4**
5.	Mention few problems associated with large dams.	**R**	**CO2**
	SECTION B (Attempt any **Three Questions) (3 x 5 = 15)**		
4.	**What** are the adverse effects of open dumping of municipal solid wastes on environment? **How** does sanitary landfill differ from open dumping? (2.5+2.5 = 5) .	**U**	**CO5**
5.	**What** is electrostatic precipitator? **What** are the advantages of electrostatic precipitator? (2.5+2.5 = 5)	**U**	**CO3**
6.	**Describe** the distribution of water resources.	**R**	**CO5**
7.	**Draw** a simple flowchart describing the steps that are followed in an EIA process in India.	**R**	**CO6**
	SECTION (Answer Any Two Questions) (2 x 10 = 20)		

8.	**How** is photochemical smog formed? **What** are effects of photochemical smog? **Discuss** the factors affecting photochemical smog? (4+3+3=10)	**U**	**CO4**
9.	**What** do you mean by BOD of water? **How** thermal pollution of water is linked to DO? A city discharges 1.25 m^3/s of wastewater into a stream whose minimum rate of flow is 8.0 m^3/s. The velocity of the stream is about 3.0 km/h. The temperature of the wastewater is 20°C and that of the stream is 15°C. The 20°C BOD_5 of the wastewater is 250 mg/l and that of the stream is 2 mg/L. The wastewater contains no dissolved oxygen, but the stream is flowing with saturated DO concentration of 9.2 mg/L. Saturated DO at 15°C is 10.2 mg/L. At 20°C, deoxygenation constant (k^1) is estimated to be 0.3 per day and reaeration constant (k^2) is 0.7 per day. Determine the critical oxygen deficit and its location. Also estimate the 20°C BOD_5 of a sample taken at the critical point. Use the temperature coefficients of 1.135 for k^1 and 1.024 for k^2. (2+2+6=10)	**Ap**	**CO3**
10.	What is hazardous waste? Discuss the methods of hazardous waste management? What is composting? (2+6+2=10)	**An**	**CO3**

EIC11001	Venture Ideation	L	T	P	C
Version 2.0		2	0	0	2
Pre-requisites/Exposure	Basic knowledge of English and computer applications such as Internet Explorer and MS Office				
Co-requisites	--				

Course Objectives

1. To help the students understand the way to be an Entrepreneur
2. To identify the right business opportunity
3. To empower students to perform a technical feasibility study and thereby developing a prototype
4. To help students in identifying their customers using primary and secondary research methods.
5. Expose students to various factors of market and competition with the help of market feasibility study, forecasting techniques, business model canvass and insights about financial statements.
6. To prepare students with finalizing their entrepreneurial Portfolio

Course Outcomes

On completion of this course, the students will be able to:

CO1. Assess personal capacity in the context of the entrepreneurial process
CO2. Assess characteristics of successful entrepreneurs and entrepreneurial forms and processes
CO3. Apply resources, research and tools for Entrepreneurial ventures
CO4. Analyze and apply opportunity identification techniques, feasibility terminology, processes and models
CO5. Develop Ideation and planning documents for entrepreneurial venture
CO6. Create pitch presentation for business

Catalog Description

Over the last decade, the core of our economy has been transitioning from one of industrial might, large monolithic corporations and mass production towards one of networks, flexible enterprises comprising many smaller units and unique value. This new economy is based on innovation originating in creativity and design; it is also disrupting long-standing and established employment patterns and bringing to the fore the importance of entrepreneurship. This core unit will bring together creativity, design and entrepreneurship at the conceptual and more practical level. It aims to explore the nature, determinants and consequences of creativity, design and entrepreneurship as well as the interaction between them.

Course Content

Unit 1. Introduction 6 hours

Preview of the Course, Introduction to the Course, Guest Lecture with U.S. Secretary of Commerce Penny Pritzker – Meaning of Innovation, Entrepreneurial opportunities, Factors influencing the feasibility of an innovation, Innovation strategy: technology-push or market-pull, Product-market fit, How to develop a business model, Walkthrough of the business model canvas, Welcome to Innovation for Entrepreneurs: From Idea to Marketplace.

Unit 2. Customer Discovery and Validation 6 hours

Customer types, Customer archetypes, Customer segments and business models, Customer segments, value propositions, product features, value mapping, interviewing customer, insights of your customers.

Unit 3: Product Understanding and Marketing. 6 hours

Customer value, The DNA of customer-centricity, Crossing the chasm, Qualitative and quantitative marketing research, importance and methods of market segmentation, Focusing on the target market, Beyond the chasm, Strategic implications of beyond the chasm, E-commerce: The internet as a selling platform.

Unit 4. Prototyping and Testing. 6 hours

Planning for prototyping, Rapid prototyping and development, Lean startup MVPs, Choosing a wire framing/UX prototyping tool, Anatomy of an experience map, What you'll learn from user testing, Analytics and insight, Troubleshooting your customer discovery, Levels of a product/service.

Modes of Evaluation: Quiz/Assignment/ presentation/ extempore/ Written Examination

Components	Presentation/Assignment/ etc	End Term Examination
Weightage (%)	**50**	**50**

Relationship between the Program Outcomes (POs), Program Specific Outcomes (PSOs) and Course Outcomes (COs)

Course Code	Course Name	COs	PO1	PO2	PO3	PO4	PO5	PO6	PO7	PO8	PO9	PO10	PO11	PO12	PSO1	PSO2	PSO3
EIC1 1001	Venture Ideation	CO(EIC1 1001).1	-	-	-	-	-	2	-	-	-	-	2	-	-	-	-
		CO(EIC1 1001).2	-	-	-	-	-	3	-	-	-	-	3	-	-	-	-
		CO(EIC1 1001).3	-	-	-	-	-	3	-	3	-	-	3	-	-	-	-
		CO(EIC1 1001).4	-	-	-	-	-	2	-	3	-	-	3	-	-	-	-
		CO(EIC1 1001).5	-	-	-	-	-	3	-	3	-	-	2	-	-	-	-
		CO(EIC1 1001).6	-	-	-	-	-	3	-	3	-	-	2	-	-	-	-
		CO(EIC1 1001)	-	-	-	-	-	3	-	3	-	-	2	-	-	-	-

1=Weakly mapped
2= Moderately mapped
3=Strongly mapped

MTH11529	Engineering Mathematics IIIA	L	T	P	C
Version 1.0	Contact Hours - 60	3	1	0	4
Pre-requisites/Exposure	10+2th level Mathematics				
Co-requisites					

Course Objectives

1. To enhance the fundamental knowledge in integral transform and method of solving differential equations which will arise in their practical field.
2. To enable students acquire concept of probability theory where true essence of statistics lies.
3. To strengthen the knowledge of the students in data collection, presentation, and to understand the basic descriptive properties of the data with statistical tools and techniques.
4. To gain the knowledge of solution procedure of problems related in statistical hypothesis.

Course Outcomes

On completion of this course, the students will be able to

CO-1	Apply integral transform to solve many engineering problems.
CO-2	Learn different methods of solving PDE.
CO-3	Acquire knowledge in probability theory.
CO-4	Use statistical hypothesis in related problems.

Catalogue Description

The main objective of this course is to train the students to use different mathematical tools, which are commonly applied to understand and analyze real-life problems. This course deals with integral transform and differential equations, which will help a student to solve many engineering problems where transformations of domain is required and also to solve many initial value problems and boundary value problems.
A major emphasis is given on the fundamental knowledge of probability and statistics where students will learn random variables with their distributions, linear regression and hypothesis testing.

Course Content

Unit I **[15]**

Laplace Transform: Definition, Linearity, shifting & scaling properties, Transform of elementary functions, Transform of derivatives and integrals, Multiplication by t & division by t. Inverse Laplace transform, Convolution theorem, Transform of periodic functions, Unit step function, Dirac delta function, Initial value & final value theorems and its application to solution of ordinary differential equations.

Unit II **[15]**

Partial Differential Equation: Introduction, classification, construction of first order partial differential equations (PDE), method of characteristic and general solution of first order PDE, canonical form of first order PDE, equations solvable by direct integration, Langrange's method, solution of non-linear first order partial differential equation by Charpit's method. Linear second order homogeneous and non-homogeneous PDE with constant coefficients, method of finding the complementary function and particular integral for homogeneous and non-homogeneous PDE, solution of heat conduction, wave equation and Laplace equation.

Unit III **[15]**

Probability: Review of concepts of probability. Random variable, discrete and continuous probability distribution, joint probability distribution, mathematical expectation, variance and co-variance of random variables, mean and co-variance of linear combination of random variables, Binomial, Hyper-geometric, Geometric, Poisson, Negative binomial distributions, Uniform, Exponential, Normal, Distribution, its applications in engineering.

Unit IV **[15]**

Statistics: measures of central tendency, measures of dispersion, Scatter diagram, Karl-Pearson's correlation, concurrent deviation method, rank correlation, regression lines, regression coefficients, properties of regression coefficients.

Hypothesis Testing

Definition, one and two tailed test, critical region, test statistics, type-I and type-II error, test on a single mean when variance is known and variance is unknown, test on two means, test on a single mean population and test on two populations, one and two sample test for variance.

Text Books:

T1. Higher Engineering Mathematics by Dr. B.S. Grewal, Khanna Publishers.
T2 Sancheti, S.C. & V.K. Kapoor, Statistical Methods.

Reference Books:

R1. Higher Engineering Mathematics, B V Ramana, Tata McGraw Hill
R2. Advanced Engineering Mathematics, Erwyn Kreyszig, John Wiley and Sons
R3. Ellhans, D.N., Fundamentals of Statistics

Modes of Evaluation: Quiz/Assignment/ presentation/ extempore/ Written Examination
Examination Scheme:

Components	Class Assessment	End Term Examination
Weightage (%)	50	50

Relationship between the Course Outcomes (COs) and Program Outcomes (POs)

Mapping between COs and POs		
	Course Outcomes (COs)	Mapped Program Outcomes
CO1	Apply integral transform to solve many engineering problems.	PO1, PSO1, PSO2, PSO3
CO2	Learn different methods of solving PDE.	PO1, PO2 PSO2, PSO3
CO3	Acquire knowledge in probability theory.	PO1, PSO2, PSO3
CO4	Use statistical hypothesis in related problems.	PO2, PSO1, PSO3

		Engineering Knowledge	Problem analysis	Design/development of solutions	Conduct investigations of complex problems	Modern tool usage	The engineer and society	Environment and sustainability	Ethics	Individual or team work	Communication	Project management and finance	Life-long Learning	Plan the manufacturing of given mechanical components and systems using engineering analysis & design tools, process planning and modern	Understand the dynamics of machine components and design components including power transmission, pressure vessels, IC engine components	Determine the performance of thermal and fluid systems including IC engines, refrigeration and air-conditioning, and power generating systems
Course Code	Course Title	PO1	PO2	PO3	PO4	PO5	PO6	PO7	PO8	PO9	PO10	PO11	PO12	PSO1	PSO2	PSO3
MTH11529	Engineering Mathematics IIIA	3	2											2	2	3

1=weakly mapped
2= moderately mapped
3=strongly mapped

MEE11003	**Material Engineering & Composites**	L	T	P	C
Version 1.0		3	0	0	3
Pre-requisites/Exposure	Engineering Physics (Properties of materials)				
Co-requisites	Engineering materials lab (MEE12007)				

Course Objectives

1. Conceptually describe the classification schemes that are used to categorize engineering materials.
2. Explain the differences in the mechanical behaviour of engineering materials based upon bond type, structure, composition, and processing.
3. Describe how and why defects (point, line and interfacial) in materials affect engineering properties and limit their use in service.
4. Describe why each of the fundamental mechanical engineering properties of materials covered in the course (stress, strain, elastic constant, creep, fatigue, wear, hardness, Poisson's ratio, toughness, ductility, flexural strength, impact strength, elongation) are important in engineering design.
5. Explain the purpose and mechanism of heat treatment processes.

Course Outcomes

On completion of this course, the students will be able to

CO1 Identify the microstructural features of materials.
CO2 Estimate the values for mechanical properties of materials.
CO3 Determine the different types and composition of the binary phases of materials.
CO4 Deduce the structures of metallic materials and their effects on mechanical properties.
CO5 Review the ethical principles, engineering codes of ethics, and professional responsibilities in the selection of materials in engineering design.

CO6 Compose different types of materials based upon their composition and required physical properties

Catalog Description

Materials are at the core of all disciplines of engineering. Engineers are better engineers when they have an awareness and understanding of the properties of materials. Science gives us a framework for understanding materials, within which we can include all classes of materials, hence to some extent unifying the treatment of metals, ceramics, polymers and composites. This is materials science. At the heart of materials science is microstructure, which characterizes the internal architecture of substances. A description of the composition and internal architecture of materials gives us a basis for understanding engineering properties by developing a broad knowledge of the underpinning science of materials, and how this links with properties, enables you to apply these concepts in engineering. This often involves thinking carefully, discerning key concepts in a particular situation, and beginning to appreciate the complexities, subtleties and ambiguities that arise when dealing with materials. Learning is through lectures, tutorials, labs, and self-study. The tutorials are a chance for students to seek advice and discuss problems set and tackled before the tutorial session. Students will be expected to read some research papers on the field of Materials Engineering.

Course Content

Module 1: Crystal Structure of Materials — 8 lecture hours

Crystal structure – concept of lattice, unit cell, crystal system, crystallographic directions and planes, face centered cubic (FCC) crystal structure, body centered crystal (BCC) structure, and hexagonal closed

packed (HCP) crystal structure, determination of crystal structures, atomic packing factor (APF), crystal defects – point, line and surface defects.

Module 2: Mechanical Testing and Evaluation of Properties 6 lecture hours

Elastic properties of materials—tensile and compressive stress and strain, stress-strain behavior, modulus of elasticity (Young's modulus), yield strength, tensile strength, plastic deformation, true stress and strain, ductility, resilience, toughness, hardness, Creep, Fatigue.

Module 3: Stability of Phases and Equilibrium Diagrams 10 lecture hours

Definition and basic concepts, Gibbs phase rule, one component phase diagram, binary phase diagram, interpretation of phase diagrams, liver rule, concept of tie line, Iron and Iron carbide phase equilibrium diagram.

Module 4: Crystallization – Nucleation and Growth 6 lecture hours

Definitions of terms related with solidification, classifications, Hume-Rothay's rules of solid solubility.

Module 5: Steels and Heat Treatments 10 lecture hours

Full annealing, spheroid zing, normalizing, the isothermal transformation diagram, continuous cooling transformation diagram, tempering, hardenability, case hardening, microstructural effects brought about by these processes and their influence on mechanical properties.

Text Books

1. Materials for Engineering, 2nd ed, 2002 by John Martin, Woodhead publications, Cambridge, England.
2. ASM Engineering Materials Handbook, Vol.4, 1991, ASM International, Metals Park, Columbus, Ohio, USA.

Reference Books: 1. Engineering Materials and Metallurgy by R. Srinivasan, 2ndEd., Tata McGraw Hill
Open Sources: • http://nptel.ac.in • http:// ocw.mit.edu/courses/mechanical-engineering/ • http://www.myopencourses.com/discipline/mechanical-engineering

Modes of Evaluation:

Components	Internal Assessment	End-Term
Weightage (%)	50	50

Relationship between the Course Outcomes (COs) and Program Outcomes (POs)

Course Code	Course Name	COs	PO1	PO2	PO3	PO4	PO5	PO6	PO7	PO8	PO9	PO10	PO11	PO12	PSO1	PSO2	PSO3
MEE1103	Material Engineering & Composites	CO(MEE1103).1	2				1	1	1	1		1		1		3	

		CO(MEE1103).2	2				1	1	1	1		1		1		3	
		CO(MEE1103).3	2		3		1	1	1	1		1		1		3	
		CO(MEE1103).4		3	3	2	1	1	1	1		1		1		3	
		CO(MEE1103).5			3	2	1	1	1	1		1		1		3	
		CO(MEE1103).6			3	2	1	1	1	1		1		1		3	
		CO(MEE1103)	2	3	3	2	1	1	1	1		1		1		3	

1=weakly mapped
2= moderately mapped
3=strongly mapped

ADAMAS UNIVERSITY
PURSUE EXCELLENCE

Model Question Paper

ADAMAS UNIVERSITY
SCHOOL OF ENGINEERING AND TECHNOLOGY
END-SEMESTER EXAMINATION:

Name of the Program: B. Tech Semester: III Stream: ME
PAPER TITLE: Materials Engg.
PAPER CODE: MEE11003
Maximum Marks: 40 Time duration: 3 hours
Total No of questions: 12 Total No of Pages: 02

Instruction for the Candidate:

1. At top sheet, clearly mention Name, Univ. Roll No., Enrolment No., Paper Name & Code, Date of Exam.
2. All parts of a Question should be answered consecutively. Each Answer should start from a fresh page.
3. Assumptions made if any, should be stated clearly at the beginning of your answer.

	Section A (Answer All the Questions) (5 x 1 = 5)		
1.	Define Composite Material.	**R**	**CO2**
2.	What is bio material?	**U**	**CO2**
3.	Define super alloys. Give example.	**R**	**CO3**
4.	Define isomorphous system.	**R**	**CO1**
5.	What is an Isotope?	**U**	**CO1**
	SECTION B (Attempt any **Three Questions) (3 x 5 = 15)**		
6.	Explain edge dislocation and screw dislocation.	**U**	**CO1**
7.	Explain the effect of any four alloying elements in Steel.	**U**	**CO4**
8.	Draw neat sketch of HCP and FCC structures. What is APF?	**R**	**CO1**
9.	Define hardenability. Factors which affects hardenability.	**U**	**CO4**
	SECTION C (Answer Any Two Questions) (2 x 10 = 20)		
10.	Briefly explain the following surface hardening system: - (i) carburizing (ii) nitriding. What are the different types of Annealing processes, Explain in brief?	**U**	**CO3, CO5**
11.	What are the basic requirements for an alloy to behave as age hardenable? Distinguish between ductile fracture and brittle fracture. (5+5)	**U**	**CO2, CO4**
12.	Define Phase Diagram. Explain Gibbs Phase Rule and Lever Rule. (2+8)	**U**	**CO1**

MEE11009	Manufacturing Technology-I	L	T	P	C
Version 1.0		3	1	0	4
Pre-requisites/Exposure	Engineering Workshop, Materials Engineering				
Co-requisites	Manufacturing Technology-I Lab				

Course Objectives:

1. To impart basic knowledge and understanding about the primary manufacturing processes such as casting, joining, forming and powder metallurgy, welding
2. To draw their relevance in current manufacturing industry.

Course Outcomes:

On completion of this course, the students will be able to

1. Outline foundry practices like pattern making, mould making, Core making and Inspection of defects.
2. Categorize various metal forming processes such as Hot and Cold Working, the functional area of forging processes in industries.
3. Examine Rolling, Forging, Extrusion and Drawing Processes and different plastic molding processes, Extrusion of Plastic and Thermoforming.
4. Illustrate the applications of sheet metal work for manufacturing components
5. Review basic idea about the welding mechanism and understand the methods and application of fusion welding, resistance welding and solid-state welding processes like TIG, MIG, Friction stir welding, spot welding etc.
6. Build different products based upon different manufacturing practices

Catalogue Description:

This course provides groundwork for understanding pertinent topics within manufacturing engineering. Students learn about the history and ideology of various manufacturing processes and how each process works and its relative advantages and limitations, Specific topics include effects of processing on the manufactured parts, selection of manufacturing methods, and their relation with material properties.

Course Content

Module 1: 10lecture hours

Metal Casting Processes

Casting – principle and classifications, sand moulds casting - basic principles, solid casting and hollow casting, patterns - types, material and design including pattern allowances, moulding sands - composition, preparation, properties and testing, core - purpose, definition, materials, preparation and applications, design of gating system, limitations and applications of top gate, bottom gate, parting gate and step gate; estimation of pouring time for top gate and bottom gate type moulds, floor mould casting - principles, method, relative advantages and applications, shell mould casting, pit mould and loam mould casting, co2 moulds casting, centrifugal casting (pure, semi and centrifuging types) investment casting, miscasting, casting defects - types, causes and remedy

Module 2: 8 lecture hours

Forging

general principles of forming processes, major classification with typical examples, hot working and cold working processes, advantage and disadvantages of hot working and cold working processes and applications. Forging - principle and classification giving few example of applications, work materials for different forging operations, tools and equipment required for forging, smithy, drop forging and

press forging (pressing)methods and use, forging dies - types, materials and design, various defects occurred due to sheet metal forming, types, causes, effects and remedy.

Module 3: 8 lecture hours
Rolling, Extrusion and Wire drawing

rolling - basic principles and general applications, characteristics and applications of hot rolling and cold rolling, various rolling processes and applications and rolled products, roll pass design for different products, various defects occurred due to sheet metal forming, types, causes, effects and remedy, wire drawing and extrusion - basic principles and requirements, classification, methods and applications, work materials and products, press tool works; basic principles, system, operations and applications, shearing, parting, notching, blanking and piercing.

Module 4: 6 lecture hours
Sheet Metal Forming and Other Forming Processes

Sheet metal forming – basic principle, various sheet metal forming techniques, design of blanks for any shearing and cupping operation. estimation of forces and power required for shearing and cupping operations, coining and embossing - basic principle and methods, various defects occurred due to sheet metal forming, types, causes, effects and remedy, other forming processes - principles, methods, essential requirements and applications of spinning and flow turning, bulging, hydro forming; magneto forming, explosive forming.

Module 5: 8lecture hours
Welding Processes

welding - principle, definition and major classification, characteristics and applications of different fusion and solid state welding processes using different heat-sources, gas welding, Thermite welding, arc welding, manual arc welding, submerged arc welding, TIG and MIG welding; plasma arc welding, resistance welding, spot welding; butt welding, seam welding, laser and electron beam welding, forge welding; friction welding; diffusion welding, ultrasonic welding, pressure welding, explosive welding. Welding defects, types, causes, effects and remedy.

Modes of Evaluation: Quiz/Assignment/ presentation/ extempore/ Written Examination
Examination Scheme:

Components	Internal Assessment	End Term
Weightage (%)	50	40

Relationship between the Course Outcomes (COs) and Program Outcomes (POs)

Course Code	Course Name	COs	PO1	PO2	PO3	PO4	PO5	PO6	PO7	PO8	PO9	PO10	PO11	PO12	PSO1	PSO2	PSO3
MEE11009	Manufacturing Technology I	CO(MEE11009).1	3	3	3	2	2	1	1	1		2		3	3		
		CO(MEE11009).2	3	3	3	2	2	1	1	1		2		3	3		

		CO(MEE11009).3	3	3	3	2	2	1	1	1		2		3	3		
		CO(MEE11009).4	3	3	3	2	2	1	1	1		2		3	3		
		CO(MEE11009).5	3	3	3	2	2	1	1	1		2		3	3		
		CO(MEE11009).6	3	3	3	2	2	1	1	1		2		3	3		
		CO(MEE11009)	3	3	3	2	2	1	1	1		2		3	3		

1=weakly mapped
2= moderately mapped
3=strongly mapped

Name: **Enrolment No:**	

Course: Manufacturing Technology-I (MEE11009)

Program: B.Tech. (ME) **Semester: IV**

Time: 03 hrs. **Max. Marks: 40**

Instructions:

Attempt **Five Questions** compulsory from **Section A** (each carrying 1 marks); any **Three Questions** from **Section B** (each carrying 5 marks)**, any Two Questions** from **Section C** (each carrying 10 marks)**.**

SECTION A (Compulsory)

1.		**Knowledge Level**	**CO**
a)	What is spring back effect in sheet metal work?	**R**	**CO4**
b)	What are the applications of core prints?	**R**	**CO1**
c)	How does penetration vary for DCSP and DCRP welding?	**U**	**CO5**
d)	Two cubical castings of the same metal and sizes of 2 cm side and 4 cm side are moulded in green sand. If the smaller casting solidifies in 2 mins, the expected time of solidifications of large casting will be _____	**Ap**	**CO2**
e)	Discuss the process of extrusion of Plastics	**U**	**CO3**

SECTION B (Answer any Three Questions)

2.	In a sand-casting operation, the total liquid head is maintained constant such that it is equal to the mould height. The time taken to fill the mould with a top gate is t_A. If the same mould is filled with a bottom gate, then the time taken is t_B. Ignore the time required to fill the running and frictional effects. Assume atmospheric pressure at the top molten metal surfaces. Establish a relation between and t_A and t_B .	**U**	**CO1**
3.	With the aid of sketches write short note on the following: a) Two High Milling b) Three High Milling c) Four High Milling	**Ap**	**CO3**
4.	What design considerations are needed to be followed in pattern design and explain how patterns are constructed?	**U**	**CO1**
5.	Discuss any one method of testing the formability of sheet metal.	**Ap**	**CO4**

SECTION C (Answer any Two Questions)

6.	Discuss elaborately any four casting defects and their remedies	**U**	**CO2**
7.	With a neat sketch explain in detail the Plasma Arc Welding Process and write its applications and demerits.	**U**	**CO5**
8.	Name and explain the suitable process for producing plunger and barrel of a syringe	**Ap**	**CO3**

MEE11005	**Fluid Mechanics**	L	T	P	C
Version 1.0		3	1	0	4
Pre-requisites/Exposure	Physics, Mathematics, Calculus, Chemistry, Differential equation.				
Co-requisites	Fluid Mechanics & Hydraulic Machinery Lab				

Course Objectives

1. To give fundamental knowledge of fluid, its properties and behaviour under various conditions of internal and external flows
2. To develop understanding about hydrostatic law, principle of buoyancy and stability of a floating body.
3. To imbibe basic laws and equations used for analysis of Kinematics and Dynamic fluids.
4. To inculcate the importance of fluid flow measurement and its applications in Industries.
5. To give fundamental knowledge for apply dimensional analysis to predict physical parameters that influence the flow in fluid mechanics.

Course Outcomes

On completion of this course, the students will be able to
CO1: Define basic terms, values and laws in the areas of fluids properties.
CO2: Predict Hydrostatic Force and its Location for a given geometry and orientation of plane surface
CO3: Examine the fluid motion and its application.
CO4: Distinguish between major loss and minor loss.
CO5: Review dimensional analysis of physical parameters that influence the flow in fluid mechanics.
CO6: Solve various problems in fluid mechanics

Catalog Description

Fluid flows are important in many scientific and technological problems including automotive design, atmospheric and oceanic circulation, renewable energy generation, energy production by chemical or nuclear combustion in engines and stars, energy utilization in vehicles, buildings and industrial processes, and biological processes such as the flow of blood. The highly multidisciplinary nature of the subject can be gauged from the fact that it is taught across multiple disciplines ranging from Mechanical, Aerospace, Civil, Chemical to Environmental Engineering. The current course covers the fundamental background in the statics and dynamics of fluids, with a special emphasis on applications of fluid mechanics, as relevant to engineering sciences in general and automotive engineering in particular. The course begins with a description of different fluid properties and covers the basic conservation laws of mass, momentum and energy. The students will learn the fundamental laws of fluid dynamics and then apply it to two distinct type of flows commonly found in real life: internal flows and external flows. The students will thus get an adequate exposure to internal flows such as pipe flows in industry, or external flows viz. flow over an aircraft wing. The student will also learn the art of engineering approximations, and the fundamental concepts of dimensional analysis, similitude and experimentation, that are involved in translating a novel idea to a real-world application. Further, being a rigorous course on problem-solving,

Course Content

Module 1: Fluid Statics 10 lecture hours

Introduction, Properties of fluid, Density or mass density, Specific weight or weight density, Specific volume, Specific gravity, Viscosity, Kinematic viscosity, Newton's law of viscosity, Surface tension and capillarity, Surface tension on liquid droplet, Surface tension on hollow bubble, Surface tension on liquid jet, Capillarity, Fluid pressure at a point, Pascal's law, Pressure variation in a fluid at rest, Absolute, Gauge, Atmospheric and Vacuum Pressures, Measurement of pressures.

Module 2: Hydrostatic Forces On Surfaces and Buoyancy 8 lecture hours

Introduction, Total pressure and Centre of pressure, Vertical plane surface sub-merged in liquid, Horizontal plane surface sub-merged in liquid, Inclined plane surface sib-merged in liquid, Buoyancy and Centre of buoyancy, Meta-center and meta-centric height, Condition of equilibrium of a floating and sub-merged body

Module 3: Kinematics and Dynamics of Fluid flow 10 lecture hours

Introduction, Methods of describing fluid motion, Types of fluid flow, Rate of flow or discharge (Q), Continuity equation, Velocity potential function and stream function, Equipotential lines, Equation of motion, Euler's equation of motion, Bernoulli's equation from Euler's equation, Practical application of Bernoulli's equation, Venturi meter, Orifice Meter, Pitot-tube, Linear momentum equation.

Module 4: Flow through Pipes 6 lecture hours

Introduction, Loss of energy in pipes, Hydraulic gradient and total energy line, Flow through pipes in series or Flow through compound pipes, Equivalent pipes, Flow through parallel pipes, Water hammer in pipes, Hagen Poiseuille Equation.

Module 5: Open Channel Flow & Dimensional Analysis 6 lecture hours

Classification of flow in channels, Discharge through open channel by Chezy's formula, Empirical formula for Chezy's constant, Most economical sections of channel, Specific Energy and specific energy curve.

Text Books

1. A Textbook of Fluid Mechanics and Hydraulic Machines, Dr. R.K. Bansal, Laxmi Publications Pvt. Ltd.,5th Edition
2. Fluid Mechanics and Fluid Machines, S K Som & G Biswas, Tata McGraw Hill Greenbaum. Sidney. College Grammar of English. Longman Publishers. ISBN: 9780582285972.

Reference Books

1. Fluid Mechanics, V.L.Streeter, McGraw Hill Book Co., (2001)
2. Introduction to Fluid Mechanics, Fox & Macdonald, Wiley
3. Fluid Mechanics, Hydraulics and Fluid machines, S Ramamrutham, Dhanpat Rai.

Open Sources:

- http://nptel.ac.in
- http:// ocw.mit.edu/courses/mechanical-engineering/
- http://www.myopencourses.com/discipline/mechanical-engineering

Modes of Evaluation: Quiz/Assignment/ presentation/ extempore/ Written Examination

Examination Scheme:

Components	Class Assessment	End Term
Weightage (%)	50	50

Relationship between the Course Outcomes (COs) and Program Outcomes (POs)

Course Code	Course Name	COs	PO1	PO2	PO3	PO4	PO5	PO6	PO7	PO8	PO9	PO10	PO11	PO12	PSO1	PSO2	PSO3
MEE 11005	Fluid Mechanics	CO(MEE 11005).1	2				1	1	1	1		1		1			3
		CO(MEE 11005).2	2				1	1	1	1		1		1			3
		CO(MEE 11005).3	2		3		1	1	1	1		1		1			3
		CO(MEE 11005).4		3	3	2	1	1	1	1		1		1			3
		CO(MEE 11005).5			3	2	1	1	1	1		1		1			3
		CO(MEE 11005).6			3	2	1	1	1	1		1		1			3

		CO(MEE 11005)	2	3	3	2	1	1	1	1		1		1			3

1=weakly mapped
2= moderately mapped
3=strongly mapped

Model Question Paper

ADAMAS UNIVERSITY
SCHOOL OF ENGINEERING AND TECHNOLOGY

END-SEMESTER EXAMINATION:

Name of the Program: B. Tech Semester: III Stream: ME
PAPER TITLE: Fluid Mechanics
PAPER CODE: MEE11005
Maximum Marks: 40 Time duration: 3 hours
Total No of questions: 12 Total No of Pages: 02

Instruction for the Candidate:

4. At top sheet, clearly mention Name, Univ. Roll No., Enrolment No., Paper Name & Code, Date of Exam.
5. All parts of a Question should be answered consecutively. Each Answer should start from a fresh page.
6. Assumptions made if any, should be stated clearly at the beginning of your answer.

Section A (Answer All the Questions) (5 x 1 = 5)			
1.	For a two-dimension flow field the equation of a stream line is given by…….	**Ap**	**CO3**
2.	What is the dimension of Kinematic Viscosity? (In terms of MLT)	**Ap**	**CO3**
3.	What is the relation between the C_d, C_c and C_v?	**Ap**	**CO4**
4.	The continuity equation of 3-D is…… valid for steady and incompressible fluid.	**U**	**CO5**

5.	What is stream function and velocity potential function?	**Ap**	**CO2**
	SECTION B (Attempt any **Three Questions) (3 x 5 = 15)**		
6.	The dynamic vescosity of an oil used for lubrication between a shaft and sleeve is 6poise. The shaft is of φ=0.4m and rotate at 190r.p.m calculate power lost in the bearing for a sleeve length of 90mm.the thickness of the oil film is 1.5mm. (As shown in Fig.) 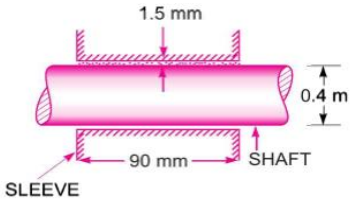	**U**	**CO01**
7.	The velocity field in a fluid flow is given by, $V=x^2yi-y^2zj+(2xyz+yz^2)$ k. Determine the magnitudes of velocity and acceleration at (1,1,2)	**U**	**CO3**
8.	Determine the total pressure and center of pressure on an isosceles triangular plate of base 4m and altitude 4m when it is immersed vertically in an oil Sp. Gr. 0.9. The base of the plate coincides with the free surface of oil. (As shown in Fig.) 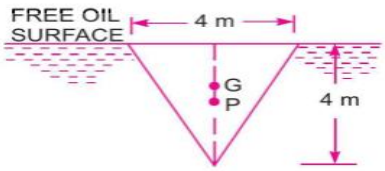	**Ap**	**CO2**
9.	Derive the Darcy Weisbach Formula and Chezy's Formula.	**Ap**	**CO4**
	SECTION C (Answer Any Two Questions) (2 x 10 = 20)		
10.	**i)** Wright down the assumption of Bernoulli's Theorem and Derive the expression of Bernoull's Equation. 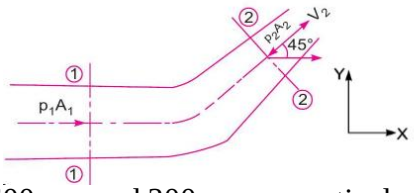 ii) A 45° reducing bend is connected in a pipe line, the diameter at the inlet and outlet of the bend being 600mm and 300mm respectively. Find the force exerted by water on the bend if the intensity of a pressure at inlet to bend 8.829N/cm^2 and rate of flow of water is 600lit/s. (As shown in Fig.)	**Ap**	**CO4 & CO5**
11.	i) Describe the various losses in Pipe Flow(only the expression). ii) Determine the rate of flow of water through a pipe of diameter 20cm and length 50m when one end of the pipe is cunnected to a tank and other end of the pipe is open to the atmosphere. The pipe is horizontal and the height of water tank is 4m above the centre of the pipe. Consider all minor losses and take f=0.009 in the formula $h_f=4fLV^2/2gd$.(initially Pressure head and kinetic head is zero and final pressure head is zero).And also draw the Hydraulic Gradient Line and Total Enargy Line. (As Shown in Fig.)	**U**	**CO5**
12.	(**i**) State the Buckinghum's Pi-Theorem. ii) The Efficiency of a fan depends on density ρ, dynamic viscosity μ of the fluid, angular velocity ω, diameter D of the rotor and the discharge Q. Express η in terms of dimensionless parameters.	**U**	**CO5**

MEE11006	Engineering Thermodynamics	L	T	P	C
Version 1.0		3	1	0	4
Pre-requisites/Exposure	12th level Chemistry				
Co-requisites	--				

Course Objectives:

1. To enable students, integrate the concepts, laws and methodologies from the first course in thermodynamics into analysis of cyclic processes.
2. To provide basic knowledge about thermodynamic laws and relations, and their application to various processes.
3. To build concept to differentiate the real gases from ideal gases to calculate the properties of real, ideal gases and gas mixtures undergoing various thermodynamic processes.
4. To prepare the students for advanced courses in Thermal Engineering

Course Outcomes:

On completion of this course, the students will be able to

1. Define the laws of thermodynamics
2. Express the second law of thermodynamics for a cycle by establishing the inequality, change in entropy and entropy generation of Clausius
3. Examine the concept of entropy, reversibility and irreversibility
4. Illustrate the T-v, P-T diagrams and P-v-T surfaces of pure substances.
5. Assess the relationship between the thermodynamic properties
6. Solve various problems related to thermodynamic systems

Catalogue Description:

This course provides a basic grounding in the principles and methods of Classical Thermodynamics. The First and Second laws of thermodynamics are discussed elaborately, along with the concepts of temperature, internal energy, heat, entropy and the thermodynamic potentials. Applications of thermodynamic concepts to topics such as heat engines, the expansion of gases and changes of phase are considered. The Third Law, and associated properties of entropy, completes the course.

Course Content

Module 1: 10 lecture hours

First Law of Thermodynamics

Basic concepts – concept of continuum, comparison of microscopic and macroscopic approach. Path and point functions. Intensive and extensive, total and specific quantities. System and their types. Thermodynamic Equilibrium State, path and process. Quasi-static, reversible and irreversible processes. Heat and work transfer, definition and comparison, sign convention. Displacement work and other modes of work. P-V diagram. Zeroth law of thermodynamics – concept of temperature and thermal equilibrium– relationship between temperature scales –new temperature scales. First law of thermodynamics – application to closed and open systems – steady and unsteady flow processes.

Module 2: 8 lecture hours

Second Law of Thermodynamics

Heat Reservoir, source and sink. Heat Engine, Refrigerator, Heat pump. Statements of second law and its corollaries. Carnot cycle Reversed Carnot cycle, Performance. Clausius inequality. Concept of entropy, T-s diagram, T-ds Equations, entropy change for – pure substance, ideal gases – different processes, principle of increase in entropy. Applications of 2^{nd}Law. High- and low-grade energy. Available and non-available energy of a source and finite body. Energy and irreversibility. Expressions for the energy of a closed system and open systems. Energy balance and entropy generation. Irreversibility. I and II law Efficiency.

Module 3: 10 lecture hours

Entropy and Exergy of Thermodynamic Systems

Clausius theorem, Clausius inequality, Entropy Principle, Property diagrams involving entropy, Entropy generation in a closed system, Entropy generation in an open system, Third law of thermodynamics,

calculation of entropy using T-ds relations, entropy as a coordinate, Introduction to availability in flow and non-flow process, Helmholtz function , Gibbs functions, Irreversibility for closed and open system, Second law efficiency, exergy analysis

Module 4: 7 lecture hours

Properties of Pure Substance

Pure Substance, Properties of pure substance; Phases of pure substances- Phase rule; Phase Change Processes of Pure Substances – triple pt., critical pt.; Property diagrams of Phase change Processes; P-V-T surface for phase change; Property tables of real substances - compressed liquid, saturated, wet & superheated vapor.

Module 5: 5 lecture hours

Thermodynamic Relations

Maxwell relations, T-ds Equations, Difference and ratio of heat capacities, Energy equation, Joule-Thomson Coefficient, Clausius-Clapeyron equation, Phase Change Processes. Simple Calculations

Text Books

1. Engineering Thermodynamics, P.K. Nag, McGraw-Hill Education
2. Fundamentals of Thermodynamics, Borgnakke&Sonntag , Wiley India (P) Ltd.,7th Ed.

Reference Books

1. An Introduction to Thermodynamics, Y.V.C.Rao, University Press,(2004)
2. Thermodynamics – An Engineering Approach, YunusCengel& Boles, McGraw-Hill Education
3. Engineering Thermodynamics, Gordon Rogers and Yon Mayhew, Pearson Education

Modes of Evaluation: Quiz/Assignment/ presentation/ extempore/ Written Examination

Examination Scheme:

Components	Class Assessment	End-Term
Weightage (%)	50	50

Relationship between the Course Outcomes (COs) and Program Outcomes (POs)

Course Code	Course Name	COs	PO1	PO2	PO3	PO4	PO5	PO6	PO7	PO8	PO9	PO10	PO11	PO12	PSO1	PSO2	PSO3
MEE11006	Engineering Thermodynamics	CO(MEE11006).1	2				1	1	1	1		1		1			3
		CO(MEE11006).2	2				1	1	1	1		1		1			3
		CO(MEE11006).3	2		3		1	1	1	1		1		1			3
		CO(MEE11006).4		3	3	2	1	1	1	1		1		1			3
		CO(MEE11006).5			3	2	1	1	1	1		1		1			3
		CO(MEE11006).6			3	2	1	1	1	1		1		1			3

		CO(MEE11006)	2	3	3	2	1	1	1	1		1		1			3

1=weakly mapped
2= moderately mapped
3=strongly mapped

Model Question Paper

ADAMAS UNIVERSITY
SCHOOL OF ENGINEERING AND TECHNOLOGY

END-SEMESTER EXAMINATION:

Name of the Program: B. Tech Semester: III Stream: ME
PAPER TITLE: Engineering Thermodynamics PAPER CODE: MEE11006
Maximum Marks: 40 Time duration: 3 hours
Total No of questions: 12 Total No of Pages: 02

Instruction for the Candidate:

1. At top sheet, clearly mention Name, Univ. Roll No., Enrolment No., Paper Name & Code, Date of Exam.
2. All parts of a Question should be answered consecutively. Each Answer should start from a fresh page.
3. Assumptions made if any, should be stated clearly at the beginning of your answer.

Section A (Answer All the Questions) (5 x 1 = 5)			
1.	State the Steady Flow Energy Equation	**U**	**CO1**
2.	What is the difference between reversible process and irreversible process?	**U**	**CO3**
3.	Calculate the quantity of heat required to raise the temperature of a steel forging of mass 180kg from 300K to 1265K. Specific heat of steel= 0.49 kJ/kgK	**Ap**	**CO3**
4.	State Maxwells Equation	**U**	**CO5**

5.	Compare the performance parameters COP of a Heat Pump and Thermal Efficiency of a Heat Engine	**Ap**	**CO2**
	SECTION B (Attempt any **Three Questions) (3 x 5 = 15)**		
6.	A domestic freezer maintains a temperature of -15ºC. The ambient air temperature is 30ºC. If heat leaks into the freezer at the continuous rate of 1.75kJ/s what is the least power necessary to pump this heat out continuously?	**Ap**	**CO2**
7.	Show that "heat" is a path function, and not a property of the system.	**U**	**CO1**
8.	A sample of steam at 200ºC and a pressure of 7bar is first expanded at a constant enthalpy to 3 bar, and then at constant entropy to 0.5bar. With the help of Mollier diagram, determine the change of entropy and enthalpy during the processes.	**Ap**	**CO4**
9.	Show that adiabatic mixing of two fluids is irreversible.	**Ap**	**CO3**
	SECTION C (Answer Any Two Questions) (2 x 10 = 20)		
10.	Prove that the maximum work obtainable from two finite bodies at temperature T_1 and T_2 is given by $$W_{max} = C_p (T_1 + T_2 - 2\sqrt{T_1 T_2})$$	**U**	**CO2**
11.	A fluid is confined in a cylinder by spring loaded, frictionless piston so that the pressure in the fluid is a linear function of the volume (p=a+ bV). The internal energy of the fluid is given by the following equation: U= 34+ 3.15pV, where U is in kJ, p in kPa, and V in m^3. If the fluid changes from an initial state of 170 kPa, 0.03 m^3 to a final state of 400 kPa, 0.06m^3, with no work other than that done on the piston, find the direction and magnitude of the work and heat transfer.	**Ap**	**CO1**
12.	a) State and prove Claussius theorem. b) Derive the First and Second Tds Equations.	**U**	**CO3 & CO5**

IDP14001	Inter-Disciplinary Project	L	T	P	C
Version 1.0		0	0	6	3
Pre-requisites/Exposure	Knowledge of Basic English				
Co-requisites	Knowledge of Basic Computer Skills				

Course Objectives

This course will develop a student's knowledge of and appreciation for the

- interdisciplinary nature of knowledge and learning
- importance and value of integrating knowledge and perspectives from multiple disciplines as a means to evaluating and understanding complex topics, problems, issues, phenomena, and events
- competencies learned during the educational process and to apply these competencies in a real-world application

Course Outcomes

Upon successful completion of the course, students will be able to

CO1. Identify the unique advantages of integrative research and learning

CO2. Understand the fundamentals of research methods and practices of various academic disciplines

CO3. Examine current issues and concerns

CO4. Explain the importance of ethics in research process

CO5. Review the inter-disciplinary systems of research documentation

CO6. Collaborate with team members to develop the required project

Typical Progress Roadmap

- After discussion with the Project Advisor(s), each student shall prepare an initial outline of their assigned project indicating the major sections of discussion, list the principal research sources for each section, and explain the overall objective of the project, including a justification of the interdisciplinary nature of the work.
- Each student shall meet with the Project Advisor(s) regularly as per the weekly Time-Table. Other meetings may be scheduled at the discretion of the Project Advisor(s) at mutually agreed upon timings.
- Typically, the progress will include a combination of industrial and academic mentoring , self study sessions, case studies, trend studies, presentation by students, interactive sessions, industrial visits etc.
- Regular submission of progress reports shall be required of each student-group as notified through the Project Advisor(s) from time to time.

Mode of Evaluation

Students will be evaluated by team participation and a team presentation at the end of the project. Interactive & continuous, task/assignment- based evaluation methodology will be applied for the course.

Course Code	Course Name	COs	PO1	PO2	PO3	PO4	PO5	PO6	PO7	PO8	PO9	PO10	PO11	PO12	PSO1	PSO2	PSO3
IDP14001	Interdisciplinary Project	CO(IDP 14001).1	2	2									2	3			
		CO(IDP 14001).2		2	2	2							2	3			
		CO(IDP 14001).3		2	2	2							2	3			
		CO(IDP 14001).4			2	2	2	2	2				2	3			
		CO(IDP 14001).5			2	2	2	2	2				2	3			
		CO(IDP 14001).6	2	2	2	2	2	2	2	2	2	2	2	3			
		CO(IDP 14001)	2	3	3	3	2	2	2	2	2	2	2	3			

MEE12013	Manufacturing Technology-I Lab	L	T	P	C
Version 1.0		0	0	2	1
Pre-requisites/Exposure	Engineering Workshop				
Co-requisites	Manufacturing Technology-I				

Course Objectives

1. To impart the knowledge of controlling process parameters of foundry shop
2. To help the student to know Design and manufacture of simple patterns
3. To enable students to understand different welding positions and joints
4. To enable students to understand TIG/MIG welding in depth
5. To help the students to learn the techniques of testing and inspection of manufacturing defects

Course Outcomes

On completion of this course, the students will be able to

CO1. Define the properties of moulding sand
CO2. Understand the allowances provided during pattern making
CO3. Apply the techniques of Tungsten Inert Gas Welding and Metal Inert Gas Welding
CO4. Illustrate cold forging practice
CO5. Review the effects of current on strength of joint welded through resistance spot welding process.
CO6. Adapt the Testing & Inspection methods of various manufacturing processes

Catalogue Description

This laboratory is aimed at providing an introduction to the Know-how of common processes used in industries for manufacturing parts in a controlled manner. Auxiliary methods for machining to desired accuracy and quality are introduced. The emphasis throughout the laboratory course will be on understanding the basic features of the processes, the parameters details of the tools used in manufacturing so that the student can acquire skill in the operation of respective machines. Evidently, acquaintance with the different materials and their characteristics is desirable and the laboratory sessions will provide adequate opportunity for this.

Course Content

List of Experiments

1. To find the effect of water content, clay content on green permeability of mould sand.
2. To determine the percentage of clay present in mould sand.
3. To find the green compression strength of the given specimen at different percentage of clay and moisture.
4. To determine the green shear strength of the given specimen for different percentages of clay and moisture.
5. To find the distribution of sand grains using a set of sieves and to find the average grain fineness number.
6. To prepare a mould for casting operation (Aluminium Casting) and characterize the defects.
7. To prepare a Lap Joint Using MIG Welding.
8. To prepare a V – Butt Joint Using TIG Welding.
9. To prepare a butt joint using OAW.
10. To study the effects of current on strength of joint welded through resistance spot welding process.
11. To make an S-hook from a given round rod, by following hand forging operation.
12. To make a ring of low carbon steel by using open die hammer forging
13. To make a tong of low carbon steel by using open die hammer forging

Text Books

1. H.M.T, "Production Technology Hand Book",TMH
2. Hayane and Rosanthal "Metal Casting".

Reference Books

1. M P Groover and Zimmer "Manufacturing processes"- PHI Pvt. Ltd. Publications.
2. Rao P.N., "Manufacturing Technology", 2nd Edition, Tata McGraw Hill Inc., New Delhi.

Open Sources

- http://nptel.ac.in
- http:// ocw.mit.edu/courses/mechanical-engineering
- http://www.myopencourses.com/discipline/mechanical-engineering

Modes of Evaluation: Quiz/Assignment/ presentation/ extempore/ Written Examination
Examination Scheme:

Components	Class Assessment	End Term
Weightage (%)	50	50

Relationship between the Course Outcomes (COs) and Program Outcomes (POs)

Course Code	Course Name	COs	PO1	PO2	PO3	PO4	PO5	PO6	PO7	PO8	PO9	PO10	PO11	PO12	PSO1	PSO2	PSO3
MEE12013	Manufacturing Technology I Lab	CO(MEE12013).1	2				1	1	1	1		1		1	3		
		CO(MEE12013).2	2				1	1	1	1		1		1	3		

		CO(MEE12013).3	2		3		1	1	1	1		1		1	3		
		CO(MEE12013).4		3	3	2	1	1	1	1		1		1	3		
		CO(MEE12013).5			3	2	1	1	1	1		1		1	3		
		CO(MEE12013).6			3	2	1	1	1	1		1		1	3		
		CO(MEE12013)	2	3	3	2	1	1	1	1		1		1	3		

1=weakly mapped
2= moderately mapped
3=strongly mapped

Name: **Enrolment No:**	ADAMAS UNIVERSITY PURSUE EXCELLENCE

Course: Manufacturing Technology-I Lab (MEE12013)

Program: B.Tech. **Semester:**

Time: 03 hrs. **Max. Marks: 40**

Instructions:

Attempt the Questions from (Carrying 40 Marks)

(Answer the Questions) (40 x 1 = 40)

Sl. No.	Laboratory Questions	**Knowledge Level**
1	Prepare a Lap Joint Using MIG Welding.	**Apply**

2	Determine the percentage of clay present in mould sand.	**Evaluate**
3	Manufacture an S-hook from a given round rod, by following hand forging operation.	**Apply**
4	Prepare a V – Butt Joint Using TIG Welding.	**Apply**

MEE12025	Machine Drawing with AutoCAD	L	T	P	C
Version 1.0		0	0	2	1
Pre-requisites/Exposure	Engineering Drawing				
Co-requisites	--				

Course Objectives

1. To provide Drawing knowledge in the structural geometry of a product.
2. To impart knowledge in different sectional views of machine parts.
3. To understand the design of a system, component or process to meet desired needs within realistic constraints.
4. To gain knowledge in modern engineering software as a tool for Design & Manufacturing.

Course Outcomes

On completion of this course, the students will be able to

CO1. Identify the structural geometry of a product.

CO2. Interpret different sectional views of machine parts.

CO3. Prepare the design of a system component or process to meet desired needs within realistic constraints.

CO4. Illustrate the application of modern engineering software as a tool for Design.
CO5. Review the 2D drawings of machine components
CO6. Compose the 2D drawings of the given machine component

Catalog Description

Machine drawing is used to communicate the necessary technical information required for manufacturing and assembly of machine components. These drawing follow rules laid down in national and International Organizations for Standards (ISO). Hence the knowledge of the different standards is very essential. Students have to be familiar with industrial drafting practices and thorough understanding of production drawing to make themselves fit in industries. The flowing topic have been covered to fulfill above objectives.
Basic Drawing & Editing Commands, Organizing Drawing with Layers, Text, Blocks, W blocks & Hatching, Creating Dimensions with Symbols, Sectional Drawing of Machine Components, Keys and Joints, Pulleys, Shaft Couplings, Journal Bearings, Introduction of Computer Aided Drafting, Introduction of Solid 3D modeling.

Course Content

Module 1: Basic Drawing & Editing Commands
Coordinate System, Drawing Lines, Erasing Objects, Drawing Lines with Polar Tracking, Drawing Rectangles, Drawing Circles, Undoing and Redoing Actions, Selecting Objects for Editing, Moving Objects, Copying Objects, Rotating Objects, Scaling Objects, Mirroring Objects, Editing Objects with Grips, Drawing Arcs, Drawing Polylines, Editing Polylines, Drawing Polygons, Drawing Ellipse, Trimming and Extending, Stretching Objects, Creating Fillets and Chamfers, Offsetting Objects, Creating Arrays of Objects.

Module 2: Organizing Drawing with Layers, Text, Blocks, W blocks & Hatching
Creating New Drawings with Templates, Definition of Layers, Layer State, Changing an Object's Layer, Working with Annotations, Creating Text Styles, Adding Text in a Drawing, Modifying Multiline Text, Arc Aligned Text, Blocks & W Blocks, Creating Blocks, Editing Blocks, Attributes, Inserting Blocks using Insert, Inserting Blocks with Design Centre.

Module 3: Creating Dimensions with Symbols
Dimensioning Concepts, Creating Dimension Styles, Adding Linear Dimensions, Adding Radial and Angular Dimensions, Editing Dimensions, Creating Multileader Styles, Adding Notes to Your Drawing.

Module 4: Sectional Drawing of Machine Components, Screw threads & fasteners**.**

Module 5: Keys and Joints**.**

Module 6: Pulleys.

Module 7: Shaft Couplings.

Module 8: Journal Bearings.

Text Books

1. **"**Machine Drawing", N.D.Bhatt, Charotar Publishing House Pvt. Limited, 42 Edition, 2008
2. "Textbook of Machine Drawing", K. C. John, PHI Learning Pvt. Ltd, 2009.
3. "Machine Drawing (Includes AutoCAD)", Ajeet Singh, Tata McGraw Hill Publications, 1st Edition, 2010.

Reference Books

1. **"**Machine Drawing", Basudeb Bhattacharyya, OUP India, 1st Edition, 2011
2. "Machine Drawing", R.K.Dhawan, S. Chand Limited, 2nd Edition, 1998.
3. "Machine Drawing", K. L. Narayana, P. Kannaiah, K. Venkata Reddy, New Age International, 3rd Edition, 2012.

Modes of Evaluation: Quiz/Assignment/ presentation/ extempore/ Written Examination
Examination Scheme:

Components	Class Assessment	End Term
Weightage (%)	50	50

Relationship between the Course Outcomes (COs) and Program Outcomes (POs)

Course Code	Course Name	COs	PO1	PO2	PO3	PO4	PO5	PO6	PO7	PO8	PO9	PO10	PO11	PO12	PSO1	PSO2	PSO3
MEE 12025	Machine Drawing with AUTOCAD	CO(MEE12025).1	2				1	1	1	1		1		1		3	
		CO(MEE12025).2	2				1	1	1	1		1		1		3	
		CO(MEE12025).3	2		3		1	1	1	1		1		1		3	
		CO(MEE12025).4		3	3	2	1	1	1	1		1		1		3	
		CO(MEE12025).5			3	2	1	1	1	1		1		1		3	
		CO(MEE12025).6			3	2	1	1	1	1		1		1		3	
		CO(MEE12025)	2	3	3	2	1	1	1	1		1		1		3	

1=weakly mapped
2= moderately mapped
3=strongly mapped

Model Question Paper

ADAMAS UNIVERSITY
SCHOOL OF ENGINEERING AND TECHNOLOGY

END-SEMESTER EXAMINATION:

Name of the Program: B. Tech Semester: V Stream: ME
PAPER TITLE: Machine Drawing with AUTOCAD
PAPER CODE: MEE12025
Maximum Marks: 40 Time duration: 3 hours
Total No of questions: 12 Total No of Pages: 02

Instruction for the Candidate:

1. At top sheet, clearly mention Name, Univ. Roll No., Enrolment No., Paper Name & Code, Date of Exam.
2. All parts of a Question should be answered consecutively. Each Answer should start from a fresh page.
3. Assumptions made if any, should be stated clearly at the beginning of your answer.

Section A (Answer All the Questions) (5 x 1 = 5)			
1.	What is the difference between engineering drawing and Machine Drawing?	**Ap**	**CO2**

2.	What is meant by Progressive and Continuous Dimensioning?	**U**	**CO1**
3.	Why sectional views are used in a Machine drawing?	**Ap**	**CO2**
4.	Explain the terms with neat sketch: - Clearance, Interference	**Ap**	**CO4**
5.	What is crowning in a Pully?	**U**	**CO3**
	SECTION B (Attempt any **Three Questions) (3 x 5 = 15)**		
6.	Show by sketches through Auto CAD: - Dimensioning of Chamfer, Dimensioning of Countersinks.	**U**	**CO1**
7.	Define the layer in Auto CAD? Describe the function and effect of layer in line	**U**	**CO4**
8.	What is the effect of dimension for any drawing through Auto CAD?	**Ap**	**CO4**
9.	Sketch the following thread profiles for a nominal size of 30X3 mm, to a scale of 10:1 a) BSW thread, b) Square thread	**Ap**	**CO2**
	SECTION C (Answer Any Two Questions) (2 x 10 = 20)		
10.	Draw the assemble figure of gib and cotter joint and also mention its various parts. 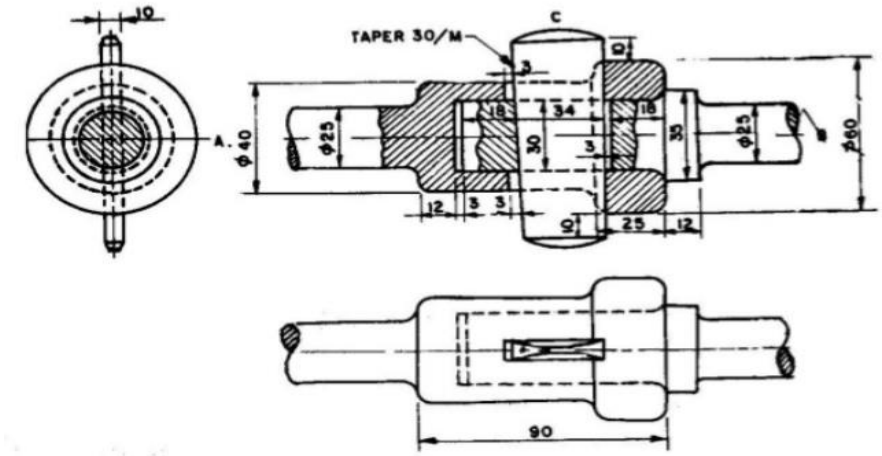	**Ap**	**CO2**
11.	Draw the assemble figure of Protected Flange Coupling and also mention its various parts. 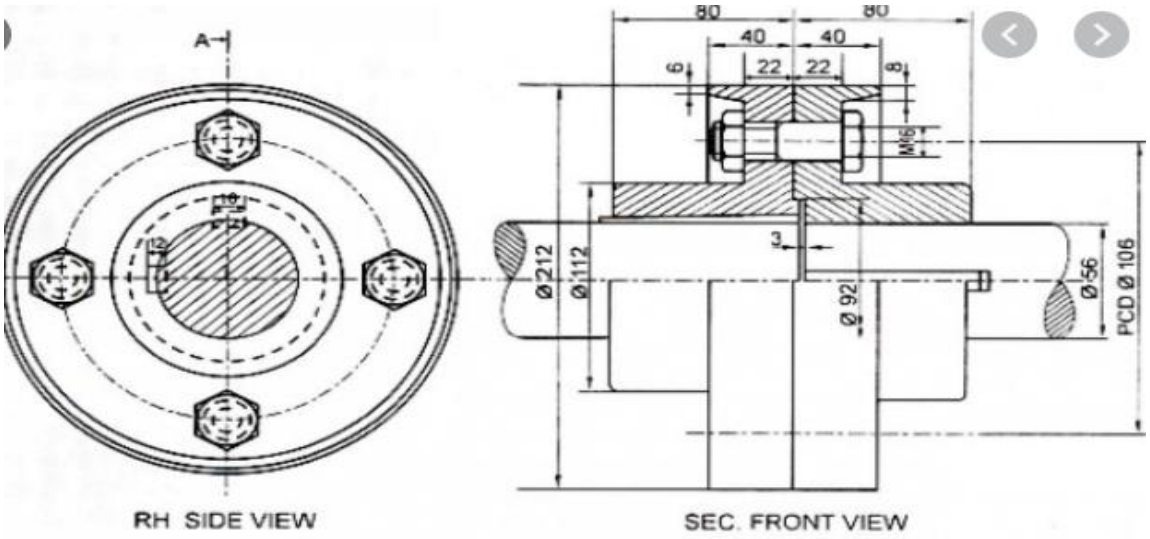	**U**	**CO2**

12.	Draw the assemble figure of Fast and Loose Pully and also mention its various parts. 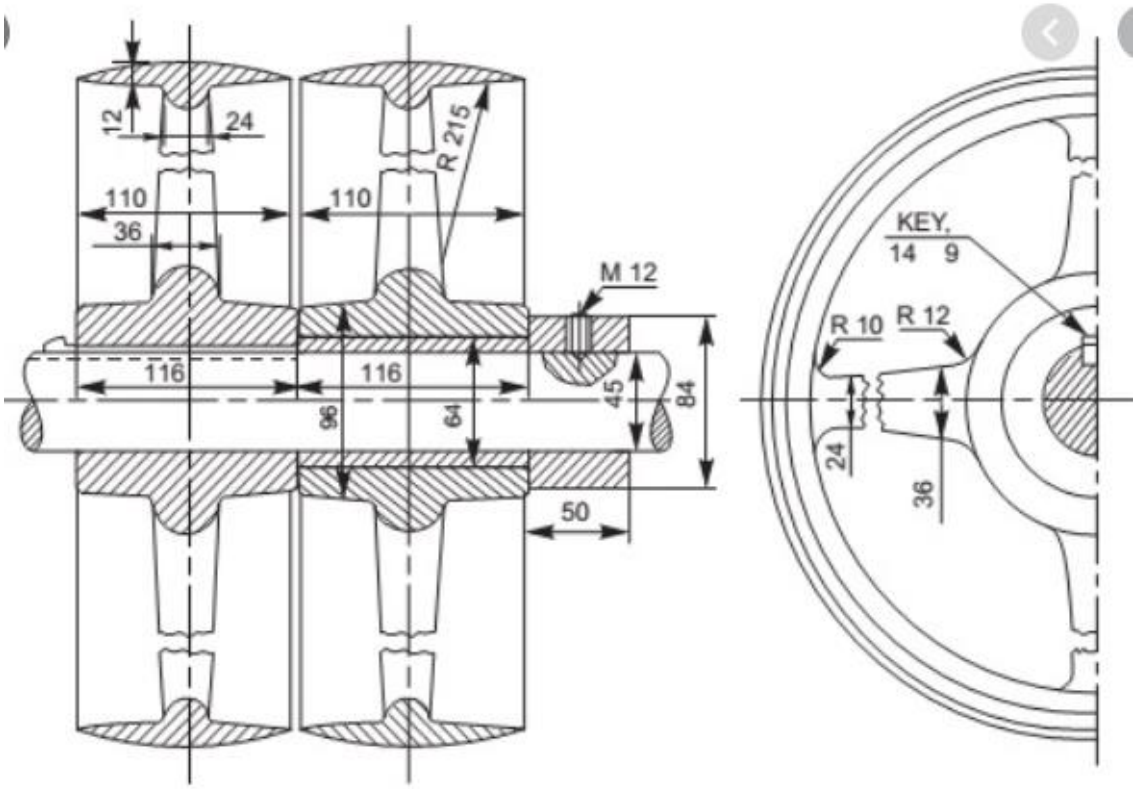	**U**	**CO2**

MTH12531	Numerical Techniques Lab	L	T	P	C
Version 1.0		0	0	2	1
Pre-requisites/Exposure	Knowledge of 12th level Mathematics, Numerical Techniques and C/MATLAB Programming Language				
Co-requisites	--				

Course Objectives

The primary objective of this course is to provide students hands on experience of implications of the various techniques used in numerical computations through understanding algorithms and writing computer programs. These techniques include solving non-linear equations and system of linear equations, computing numerical interpolation and numerical integrations, and solving ordinary differential equations. The ultimate goal of this course is to enhance the skill to critically think, model and solve any mathematical problems.

Course Outcomes

On completion of this course, the students will be able to

CO1. Numerically solve non-linear equations related to univariate problems
CO2. Numerically solve system of linear equation related to multivariate problems
CO3. Obtain interpolated value of a function that is known at a finite number of points
CO4. Numerically compute values of any definite integrals
CO5. Solve initial value problems representing systems with spatial/temporal variations

Catalogue Description

Numerical computations play a crucial role in solving simple to complex problems in science and engineering. Growing power and efficiency of the modern computers has made the numerical computations more sophisticated, accurate and powerful. Practical knowledge of numerical computation techniques is very essential for modern science and engineering. This lab course is designed for under graduate and BTech students to provide them comprehensive knowledge and practical experience of solving various mathematical problems using suitable numerical techniques. In this course students will learn algorithms and write computer programs for the numerical techniques towards solving problems. The course includes techniques for solving non-linear equations and system of linear equations, computing interpolations and integrations of functions, and solving ordinary differential equations. The course will help students to build the skill to model and solve real-life problems with simple to moderate level of difficulty.

Course Content

Write C/ MATLAB programs to execute the followings:

1. The root of non-linear equation using Bisection method.
2. The root of non-linear equation using false position method.
3. The root of non-linear equation using Newton-Raphson method.
4. Interpolate values using Newton's forward Interpolation method.
5. Interpolate values using Newton's backward Interpolation method.
6. Interpolate values using Lagrange's interpolation method.
7. Solve a system of linear equation using gauss-elimination method.

8. Solve a system of linear equation using Gauss-Seidel method.
9. Evaluate the integral using different numerical integration rules.
10. Solve an ordinary differential equation using different numerical methods.

Text Books

1. S. Dey, S. Gupta, Numerical Methods, McGraw Hill Education (India) Pvt. Ltd., 2013.
2. Amritava Gupta, S.C. Bose, Introduction to Numerical Analysis, 3rd Ed., Academic Publishers, 2013.
3. D. Kincaid and W. Cheney, Numerical Analysis: Mathematics of Scientific Computing, 3rd Ed., AMS, 2002.
4. K. E. Atkinson, An Introduction to Numerical Analysis, 2nd Ed., John Wiley& Sons, 1989.

Reference Books

1. Laurene V. Fausett, Applied Numerical Analysis Using MATLAB, 2nd Ed., Pearson, 2007.
2. B.S. Grewal, Numerical Methods in Engineering & Science: with Programs in C & C++, 11th Ed., Khanna Publishers, 2013.

Modes of Evaluation: Quiz/Assignment/ presentation/ extempore/ Written Examination
Examination Scheme:

Components	Attendance	Internal Assessment	MTE	ETE
Weightage (%)	10	30	20	40

Relationship between the Course Outcomes (COs) and Program Outcomes (POs)

Mapping between COs and POs		
	Course Outcomes (COs)	**Mapped Program Outcomes**
CO1	Numerically solve non-linear equations related to univariate problems	**PO1-6, PSO1**
CO2	Numerically solve system of linear equation related to multivariate problems	**PO1-6, PSO2**
CO3	Obtain interpolated value of a function that is known at a finite number of points	**PO1-6, PO9, PO11-12**
CO4	Numerically compute values of any definite integrals	**PO1-6, PO9, PO11-12**
CO5	Solve initial value problems representing systems with spatial/temporal variations	**PO1-6, PO9, PO11-12**

		Engineering Knowledge	Problem analysis	Design/development of solutions	Conduct investigations of complex problems	Modern tool usage	The engineer and society	Environment and sustainability	Ethics	Individual or team work	Communication	Project management and finance	Life-long Learning	Plan the manufacturing of given mechanical components and systems using engineering analysis & design tools, process planning and modern manufacturing methods	Understand the dynamics of machine components and design components including power transmission, pressure vessels, IC engine components	Determine the performance of thermal and fluid systems including IC engines, refrigeration and air-conditioning, and power generating systems
Course Code	Course Title	PO1	PO2	PO3	PO4	PO5	PO6	PO7	PO8	PO9	PO10	PO11	PO12	PSO1	PSO2	PSO3
SMA42216	Numerical Techniques Lab	3	3	3	3	2	2	2	2	3		2	2	2	3	3

1=weakly mapped
2= moderately mapped
3=strongly mapped

SOC14100	Community Service	L	T	P	C
Version 1.0		-	-	-	1
Pre-requisites/Exposure	Knowledge of Basic English				
Co-requisites	Knowledge of Basic Computer Skills				

Course Objectives

1. To familiarise the students on the concept 'giving back to the society'.
2. To familiarize the students on the issues faced by marginalized communities.
3. To provide an experiential platform to the students on any one or two issues as an internship.

Course Outcomes

On completion of this course, the students will be able to

CO1: Understand the concept of social responsibility through an internship.
CO2: Acquire hands on experience in 'giving back to the society' through the concept of social responsibility through an internship.

Catalog Description

Along with Intelligent Quotient, it is important for students to enhance their Emotional Quotient as well. The Social Internship offers opportunity to the student to be empathetic towards social issues facing our society. To help and support the affected community / cause through a field internship is the essence of the course in 'giving back to the society'.

Course Content

Unit I:
Introduction to the course. A brief on social issues facing the society with both global and Indian examples.

Unit II:
Minimum 24 hours of field work on a social issue and helping the marginalized / affected community / cause with photographs and testimonies.

Unit III:
Submission of individual reflection on the social service rendered.

The benefits that accrue to the students are

A.) Subjective

1. Psychosomatic benefits: Volunteering increases overall life satisfaction and also helps to relive stress and acts as an anti-depressant.
2. Intellectual benefits: Enhances knowledge through new experiences, and develops communication skills.
3. Career benefits : Enhances career prospects by acquisition of work-related skills, builds good references for employers and provides a forum to network with future potential employers. It also The experience allows gained helps students to take up leadership positions. Letters of recommendation can also be easily sought. Research shows that students who indulge in volunteer word perform better in studies as it invigorates their passion for learning
4. Personal benefits : Real world skills like leadership, problem-solving, collaboration with others, time management and communication skills, learn patience and empathy.
5. Connect learning to real world and enables deeper and lifelong learning.

B.) **Community**

1. Collective benefits: Strong interpersonal bonds are created, and leads to increased civic and social awareness and responsibility.

Further Reading :

1. Tadevosyan, Gohar & Schoenhuth, Michael. Participatory Research Approach : Principles, Challenges and Perspectives. http://ysu.am/files/01G_Tadevosyan_M_Schoenhuth.pdf
2. Bergold, Jarg & Thomas Stefan. Participatory Research Methods: A Methodological Approach in Motion http://www.qualitative-research.net/index.php/fqs/article/view/1801/3334

Plan of Work

1. Reading on social issues facing the society with both global and Indian examples.
2. Selecting an issue where the student wishes to contribute and wants to make a difference.
3. Areas - The internship may be broadly completed by getting in touch with NGO in your city / town / Police / Municipal Corporation / Local Gram Panchayat / Hospital / State Health Department / Women & Child Development Centre / CSR departments of Corporates /school / Old Age Home / Orphanage / Literacy Drive / Aanganwadi Centres / etc.
4. **Online Discussion –** Through discussion, students elaborate their preferred area of work with reference to the Global Scenario and India. Reason for choosing that area also needs and resources of the people in their area of Social Internship and also submit the testimonials, which include signature of the authority where students initiated their work, or the signature of the authority in whose area students are currently working or photographs of work (photographs must include students working).
5. **Final Report Submission** - Submission of the Testimonials include signatures of the authorities you have worked with, or the signature of the authority in whose area you have worked or photographs of your work (photographs must include you working). Students' accomplishment in their area of operation along with the major successes student experienced and major challenges faced.
6. Students will submit the complete elaborated report along with testimonials and completion certificate in the form of signed Template

- The registration for all students will open twice, during winter and summer breaks. They may enroll for the internship in either of the two breaks.
- The student will have to submit a continuous record of their 10 to 15 days internship in the form of photographs and testimonies (wherever required).

Mode and Scheme of Online Evaluation:

Modes of Evaluation: Online – Quiz / Assignment / Discussions / Case Studies
Examination Scheme:

Components	Attendance	Internal Assessment (Discussion+ Initiating Internship Template) MTE	ETE (Detailed Report Submission + Testimonials Photographs / Student Experience Sharing Video)
Weightage (%)	10	30	60

Relationship between the Course Outcomes (COs) and Program Outcomes (POs)

Mapping between COs and POs

	Course Outcomes (COs)	Mapped Program Outcomes
CO1	Understand the concept of social responsibility through an internship.	**PO6, PO9, PO12, PSO1**
CO2	Acquire hands on experience in 'giving back to the society' through the concept of social responsibility through an internship.	**PO6, PO9, PO12, PSO1**

		Engineering Knowledge	Problem analysis	Design/development of solutions	Conduct investigations of complex problems	Modern tool usage	The engineer and society	Environment and sustainability	Ethics	Individual or team work	Communication	Project management and finance	Life-long Learning	Plan the manufacturing of given mechanical components and systems using engineering analysis & design tools	Understand the dynamics of machine components and design components including power transmission, pressure vessels, IC	Determine the performance of thermal and fluid systems including IC engines, refrigeration and air-conditioning, and
Course Code	Course Title	PO1	PO2	PO3	PO4	PO5	PO6	PO7	PO8	PO9	PO10	PO11	PO12	PSO1	PSO2	PSO3
SOC14100	Community Service						3			3			3			

1=weakly mapped
2= moderately mapped
3=strongly mapped

MEE11004	**Mechanics of Solids**	L	T	P	C
Version 1.0		3	1	0	4
Pre-requisites/Exposure	Engineering Mechanics, Engineering Mathematics				
Co-requisites	Material Testing Lab (MEE12007)				

Course Objectives

1. To develop understanding of the basic concepts related to tensile, compressive and shear stresses in engineering components.
2. To discuss the basic principles of torsion in shafts, shear force and bending moment in beams, deflection in springs and beams and to analyze the axial stresses of thin cylinders and spherical shells.
3. To study the behaviour of determinate beams and examine the internal forces, stresses induced and learn the theory of torsion and stresses developed in solids, hollow shafts and helical springs.

Course Outcomes

On completion of this course, the students will be able to

CO1. Outline the physical significance of stress and strain developed in deformable bodies.
CO2. Express the concept of shear forces and bending moment on the flexural beams.
CO3. Apply the problems of torsion and stresses developed in solid, hollow shafts and helical springs.
CO4. Illustrate the state of stress for two- and three-dimensional body.
CO5. Assess the mechanics of deformable solids to decide the stability of beams and columns.
CO6. Solve various problems related to mechanics of non-deformable bodies

Catalogue Description

This course introduces students to the basics of strength of materials. Students will undergo to analyze the mechanics of deformable bodies. The course covers the following topics; stress and strain concepts, axial load, statically indeterminate axially loaded members, thermal stress, torsion, angle of twist, statically indeterminate torque-loaded members, bending, combined loadings, stress and strain transformation, deflection of beams and theory of columns.

Course Content

Module 1: Concepts of Stress and Strain (10 Lecture Hours)

Stress, strain, type of stresses, stress-strain curve, elastic limit, Hooke's law, factor of safety, bars of varying cross section, bars of composite sections, elongation due to self-weight, bars of uniform strength, elastic constants and their relationship, generalized Hooke's Law, volumetric strain, thermal stress, thermal strain. Thin cylinders and spherical shells: stresses, strains and volumetric changes.

Module 2: Bending Moments (BM) and Shear Forces (SF) (6 Lecture Hours)

Type of Beams, type of loads, relationship between intensity of loading, SF and BM sign convention, SF and BM diagrams for cantilever, simple supported and overhanging beams.

Module 3: Bending & Torsion of Structural Members (8 Lecture Hours)

Theory of bending, assumptions, neutral axis and moment of resistance, bending stresses in symmetrical sections, section modulus, composite beams, shear stresses in beams. Torsional stress and deformation in circular members, design of circular members in torsion, closed coil helical spring.

Module 4: Concepts of Principal Stress and Principal Strain (6 Lecture Hours)

Stresses on inclined plane, stresses on inclined plane due to two perpendicular stresses, Mohr's circle for plane stress and plane strain, stresses on inclined plane due to normal and shear stresses, principal plane, principal stresses and strains, strain gauges and rosettes.

Module 5: Deflection of Beams and Stability of Columns (8 Lecture Hours)

Relationship among curvature, slope and deflections, slope and deflection of cantilever and simply supported beams, Macaulay's method. Failure of columns, slenderness ratio, short and long columns, crippling load, Euler's theory, Rankine's formula.

Text Books:

1. "Mechanics of Materials", Beer & Johnston, McGraw Hill, 7th Edition, 2016
2. Strength of Material, S. S Bhavikatti, Vikas Publishing, 4th Edition, 2013

Reference Books:

1. "Elements of Strength of Materials" Timoshenko & Young, East west press, 5th Edition, 2003.
2. "Mechanics of Materials", Egor P Popov, Prentice Hill, 2nd Edition, 1976.
3. "Introduction to Solid Mechanics", Shames & Pitarresi, Prentice Hall India, 3rd Edition, 1999.
4. "Strength of Materials" Andrew Pytel & F L Singer, Harpercollins College Div, 4th Edition, 1990

Modes of Evaluation: Quiz/Assignment/ presentation/ extempore/ Written Examination
Examination Scheme:

Components	Class Assessment	End-Term
Weightage (%)	50	50

Relationship between the Course Outcomes (COs) and Program Outcomes (POs)

Course Code	Course Name	COs	PO1	PO2	PO3	PO4	PO5	PO6	PO7	PO8	PO9	PO10	PO11	PO12	PSO1	PSO2	PSO3
MEE 11004	Mechanics of Solids	CO(MEE 11004).1	2				1	1	1	1		1		1		3	
		CO(MEE 11004).2	2				1	1	1	1		1		1		3	
		CO(MEE 11004).3	2		3		1	1	1	1		1		1		3	
		CO(MEE 11004).4		3	3	2	1	1	1	1		1		1		3	
		CO(MEE 11004).5			3	2	1	1	1	1		1		1		3	
		CO(MEE 11004).6			3	2	1	1	1	1		1		1		3	
		CO(MEE 11004)	2	3	3	2	1	1	1	1		1		1		3	

1=weakly mapped,
2= moderately mapped,
3=strongly mapped

Name:

Enrolment No:

Course: MEE11004 – Mechanics of Solids

Program: B.Tech. (ME) **Semester: ODD 2020-21**

Time: 03 hrs. **Max. Marks:40**

Instructions:

Attempt **Five Questions** compulsory from **Section A** (each carrying 1 marks); any **Three Questions** from **Section B** (each carrying 5 marks)**, any Two Questions** from **Section C** (each carrying 10 marks)**.**

Section A (Compulsory)

1	(a) Define Poisson's ratio.
	(b) In a Tensile test, strain of 0.003 against the stress of 342 MPa of a material within its elastic range. Evaluate Elastic Modulus (in GPa).
	(c) What is slenderness ratio.
	(d) What do you mean by plane stress.
	(e) Compare Open and closed coil helical spring.
	SECTION B (Answer any Three Questions)
2.	The stress at a point is given $[\sigma_{ij}] = \begin{bmatrix} 5 & 0 & 0 \\ 0 & -6 & -12 \\ 0 & -12 & 1 \end{bmatrix}$. Determine (a) the principal values, (b) the principal directions (and sketch them).
3.	A cantilever beam is subjected to point load as shown in figure below. Construct shear force and bending moment diagram. 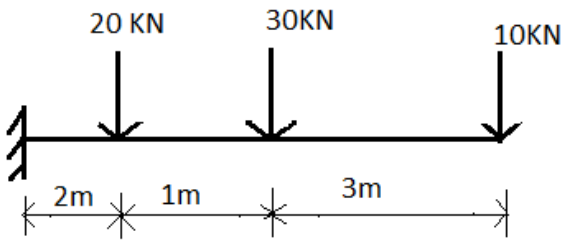

4.	The composite bar shown in figure below is subjected to a tensile force of 30KN. The extension observed is 0.372 mm. Determine the Young's Modulus of brass, if Young's modulus of steel is $2x10^5$ N/mm^2. 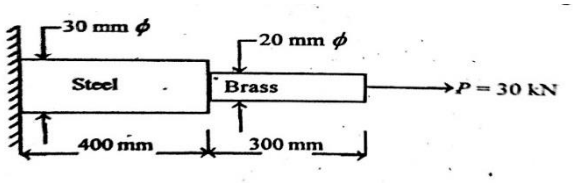
5.	Explain and derive the Torsion equation $\frac{T}{J} = \frac{\tau}{r} = \frac{G\theta}{l}$ with usual notations.
	SECTION C (Answer any Two Questions)
6.	(a) Discuss the stress-strain curve for tension test on a Mild Steel specimen and mark the significant point on a neat sketch. (b) A closed coiled helical spring is to carry a load of 500 N. Its mean coil dia. is 10 times the wire dia. Maximum shear stress in the material is 80 N/mm^2. Calculate the wire diameter, and coil diameter. If the spring stiffness (K) = 20 N/mm and G = 8.6×10^4 N/mm^2. Compute the number of coils.
7.	(a) Develop the relation between load, Shear Force and Bending Moment. (b)A simply supported beam of length l is point loaded (W) centrally. Deduce the expression for deflection.
8.	Construct the Mohr's Circle of the stress element shown below. Determine the principle stresses and the maximum shear stresses. What we know: σ_x = -80 MPa σ_y = +50 MPa τ_{xy} = 25 MPa.

MEE11015	**Manufacturing Technology-II**	L	T	P	C
Version 1.0		3	1	0	4
Pre-requisites/Exposure	Manufacturing Technology-I, Materials Engineering				
Co-requisites	--				

Course Objectives:

1. The course provides students with fundamental knowledge and principles in material removal processes.
2. In this course, the students apply the fundamentals and principles of metal cutting to practical applications through multiple labs using lathes, milling machines, grinding machines, and drill presses, etc.
3. To demonstrate the fundamentals of machining processes and machine tools.
4. To develop knowledge and importance of metal cutting parameters.
5. To apply knowledge of basic mathematics to calculate the machining parameters for different machining processes.
6. To provide comprehensive knowledge of the wide range of additive manufacturing processes, capabilities and materials

Course Outcomes:

On completion of this course, the students will be able to

CO1 Identify the metal cutting processes.
CO2 Understand the types, operations and constructions of different types of lathes.
CO3 Determine the inter-relationship between cutting parameters and machining performance on shaper, planer, milling and drill
CO4 Organize concepts to generate Gears using milling machine and hobbing machines
CO5 Review the principles of additive manufacturing processes.
CO6 Build small products using different manufacturing practices

Catalogue Description:

Study of fundamentals of Manufacturing Process and hence educate the students about the scope ofthe subject. To train the students in the metal cutting domain so as to equip them with adequateknowledge about the various processes like turning, shaping, planning, drilling, milling and grinding.To emphasize upon the prominent theories, concepts and constructional features, machining time, applications of machine tools related to them. To provide an insight about the cutting tool geometry, cutting tool material, tool life, formation of chips, requirements of cutting fluid. To laygroundwork for further studies in manufacturing stream.

Course Content

Module 1: 8 lecture hours

THEORY OF METAL CUTTING

Machining- Introduction, Definition, metal cutting methods - mechanics of metal machining – chip formation – types of chips-chip breaker- Merchant Circle Diagram-cutting force calculation- Single point cutting tool nomenclature-Cutting tool materials – Tool wear - Tool life - cutting fluids. Introduction to ISO Standards in Machine Tools (e.g., ISO 9001, ISO 230 series for testing)

Module 2: 8 lecture hours

CENTRE LATHE AND SPECIAL PURPOSE LATHES

Centre lathe- constructional features and various operations- taper turning methods- thread cutting methods- special attachments- machining time and power estimation. Capstan and turret lathes - automats – Swiss type – automatic screw type.

Module 3: 8 lecture hours

SHAPER, PLANNER, MILLING AND DRILLING MACHINES

Shaper – planer – slotting Machines – quick return mechanism – Milling Machines – milling cutters – operations; Drilling- reaming – boring – tapping-inter-relationship between cutting parameters and machining performance

Module 4: 10 lecture hours

SAWING - BROACHING AND GEAR CUTTING

Sawing machine: hack saw- band saw- circular saw; broaching machines – types-working principle-nomenclature. Gear Generation: forming- shaping- hobbing

ABRASIVE PROCESSES

Abrasive processes: grinding wheel – specifications and selection- types of grinding machines. Honing-lapping- super finishing- polishing and buffing

Module 5: 6 lecture hours

ADDITIVE MANUFACTURING PROCESSES

Introduction to layered manufacturing, Importance of Additive Manufacturing Additive Manufacturing in Product Development Classification of additive manufacturing processes, Common additive manufacturing technologies; Fused Deposition Modeling(FDM), Selective Laser Sintering(SLS), Stereo Lithography(SLA), Selection Laser Melting (SLM), Jetting, 3D Printing, Capabilities, materials, costs, advantages and limitations of different systems.

Text Books

1. Machining and Machine Tools, A. B. Chattopadhyay, Wiley-India
2. Principles of Machine Tools, G. C. Sen and A. Bhattacharyya, New Central Book Agency
3. Gibson, I., Rosen, D.W. and Stucker, B., "Additive Manufacturing Methodologies: Rapid Prototyping to Direct Digital Manufacturing", Springer, 2015.

Reference Books

1. Fundamentals of Machining and Machine Tools, G. Boothroyd and W. A. Night, CRC Press
2. Metal Cutting Theory and Practice, A. Bhattacharyya, New Central Book Agency
3. Chua Chee Kai, Leong Kah Fai, "3D Printing and Additive Manufacturing: Principles & Applications", 4th Edition, World Scientific, 2015.

Modes of Evaluation: Quiz/Assignment/ presentation/ extempore/ Written Examination

Examination Scheme:

Components	Class Assessment	End Term
Weightage (%)	50	50

Relationship between the Course Outcomes (COs) and Program Outcomes (POs)

Course Code	Course Name	COs	PO1	PO2	PO3	PO4	PO5	PO6	PO7	PO8	PO9	PO10	PO11	PO12	PSO1	PSO2	PSO3
ME E11015	Manufacturing Technology II	CO(MEE11015).1	2				1	1	1	1		1		1	3		
		CO(MEE11015).2	2				1	1	1	1		1		1	3		
		CO(MEE11015).3	2		3		1	1	1	1		1		1	3		
		CO(MEE11015).4		3	3	2	1	1	1	1		1		1	3		

		CO(ME E11015) .5			3	2	1	1	1	1		1		1	3		
		CO(ME E11015) .6			3	2	1	1	1	1		1		1	3		
		CO(ME E11015)	2	3	3	2	1	1	1	1		1		1	3		

1=weakly mapped,
2= moderately mapped,
3=strongly mapped

Model Question Paper

ADAMAS UNIVERSITY
SCHOOL OF ENGINEERING AND TECHNOLOGY

END-SEMESTER EXAMINATION:

Name of the Program: B. Tech Semester: Stream: ME
PAPER TITLE: Manufacturing Technology-II
PAPER CODE: MEE11015
Maximum Marks: 40 Time duration: 3 hours
Total No of questions: 12 Total No of Pages: 02

Instruction for the Candidate:

1. At top sheet, clearly mention Name, Univ. Roll No., Enrolment No., Paper Name & Code, Date of Exam.
2. All parts of a Question should be answered consecutively. Each Answer should start from a fresh page.
3. Assumptions made if any, should be stated clearly at the beginning of your answer.

	Section A (Answer All the Questions) (5 x 1 = 5)		
1.	what is shear plane in orthogonal metal cutting	**Ap**	**CO3**
2.	Represent hobbing operation in Generatrix and Directrix (G/D) method.	**Ap**	**CO1**
3.	How many motions are provided to the tool and job together in gear shaping machine?	**Ap**	**CO2**
4.	The cutting tool is reciprocated in shaping machine by which mechanism?	**U**	**CO4**
5.	Which mechanism is used for changing feed in center lathe?	**Ap**	**CO5**
	SECTION B (Attempt any **Three Questions) (3 x 5 = 15)**		
6.	a) State the purposes of machining b) How machining can be defined?	**R**	**CO4**
7.	State the major roles or functions of the kinematic systems in machine tools.	**U**	**CO2**
8.	What is indexing? Briefly explain simple indexing with an example.	**Ap**	**CO5**
9.	Write short notes on following with a sketch: i) Boring ii) Reaming iii) Countersinking	**R**	**CO3**
	SECTION C (Answer Any Two Questions) (2 x 10 = 20)		
10.	a) What are the desirable properties of cutting tool materials? Briefly explain. b) Define cutting fluid and explain the functions of cutting fluid.	**Ap**	**CO4**
11.	While turning a steel rod by a given cutting tool at a given machining condition under a given environment, the tool life decreases from 80 min to 20 minutes due to increase in cutting velocity from 50 m/min to 100 m/min. At what cutting velocity the life of the same tool under the same condition and environment will be 40 minutes.	**Ap**	**CO4**
12.	In orthogonal cutting of a 50 mm diameter MS bar on a lathe, the following data was obtained. Rake angle = 15°, cutting speed = 100 m/min, feed = 0.2 mm/rev, cutting force = 180 N, feed force = 60 N, chip thickness = 0.3 mm. Calculate: i) The shear plane angle ii) Coefficient of friction iii) Chip flow velocity iv) Shear force	**Ap**	**CO2**

MEE11014	Thermal Engineering	L	T	P	C
Version 1.0		3	1	0	4
Pre-requisites/Exposure	Engineering Thermodynamics				
Co-requisites					

Course Objectives

1. To extend in-depth knowledge in application the laws of thermodynamics.
2. To clarify availability concept and analyze availability cycles.
3. To explain multi-component systems.
4. To provide broad knowledge to analyze HVAC and combustion systems.
5. To develop design and optimization procedures for thermodynamic systems.

Course Outcomes

On completion of this course, the students will be able to

CO1: Identify the processes of vapor power cycles.
CO2: Understand the processes of air standard cycles.
CO3: Examine the working principle of reciprocating compressors and its efficiencies.
CO4: Analyze the working principle of refrigeration and air conditioning systems.
CO5: Review the psychometric charts.
CO6: Solve various problems related to thermal engineering

Catalog Description

To present a comprehensive and rigorous treatment of classical thermodynamics while retaining an engineering perspective. To lay the groundwork for subsequent studies in such fields as fluid mechanics, heat transfer and to prepare the students to effectively use thermodynamics in the practice of engineering. To develop an intuitive understanding of thermodynamics by emphasizing the physics and physical arguments. To present a wealth of real world engineering examples to give students a feel for how thermodynamics is applied in engineering practice.

Content

10 lecture hours

Module 1: Vapour Power Cycle

Vapour power cycles & its modifications, Performance parameters of cycles, Carnot vapour cycle, Rankine cycle, reheat cycle, Ideal regenerative cycle, Reheat & Regenerative cycle for steam, Binary cycle and cogeneration. Introduction to steam generators: Boilers, Classifications, Fire-tube and water-tube boilers. Mountings and Accessories, Losses in boilers. Equivalent evaporation. Boiler Efficiency.

8 lecture hours

Module 2: Gas Power Cycle

Fundamentals of I.C. Engine, Air Standard cycles; Otto, Diesel, Dual Combustion, Ericson and Brayton Cycle P-V & T-S representations, Efficiency Calculations, Mean Effective Pressure. Fuel-air cycles and actual cycle

6 lecture hours

Module 3: Air Compressor

Reciprocating Compressors Operation of a single stage reciprocating compressors. Work input through p-v diagram and steady state steady flow analysis. Effect of clearance and volumetric efficiency. Adiabatic, isothermal and mechanical efficiencies.

10 lecture hours

Module4: Refrigeration & Air Conditioning

Vapour compression refrigeration system; description, analysis, refrigerating effect. Capacity, power required units of refrigeration, COP, Refrigerants and their desirable properties, alternate Refrigerants. Any one case study on cold storage or industrial refrigerator. Air cycle refrigeration; reversed Carnot cycle, reversed Brayton cycle, Vapour absorption refrigeration system. Steam jet refrigeration.

6 lecture hours

Module 5: Psychrometry

Properties of Atmospheric air, and Psychometric properties of Air, Psychometric Chart, Analysing Air-conditioning Processes; Heating, Cooling.

Text Books

1. Thermal Engineering, P.L. Ballaney, Khanna Publications
2. Applied Thermodynamics for Engg. Technologies, Eastop, Addison Wesley Longman Ltd., (2004)

Reference Books:

1. Thermal Engineering, R.K. Rajput, LP
2. Refrigeration & Air Conditioning, C.P. Arora, TMH
3. Internal Combustion Engines, V. Ganesan, Tata McGraw-Hill Education

Open Sources:

- http://nptel.ac.in
- http:// ocw.mit.edu/courses/mechanical-engineering
- http://www.myopencourses.com/discipline/mechanical-engineering

Modes of Evaluation: Quiz/Assignment/ presentation/ extempore/ Written Examination
Examination Scheme:

Components	Class Assessment	End-Term
Weightage (%)	50	50

Relationship between the Course Outcomes (COs) and Program Outcomes (POs)

Course Code	Course Name	COs	PO1	PO2	PO3	PO4	PO5	PO6	PO7	PO8	PO9	PO10	PO11	PO12	PSO1	PSO2	PSO3
MEE 11014	Thermal Engineering	CO(MEE 11014).1	2				1	1	1	1		1		1			3
		CO(MEE 11014).2	2				1	1	1	1		1		1			3
		CO(MEE 11014).3	2		3		1	1	1	1		1		1			3
		CO(MEE 11014).4		3	3	2	1	1	1	1		1		1			3
		CO(MEE 11014).5			3	2	1	1	1	1		1		1			3
		CO(MEE 11014).6			3	2	1	1	1	1		1		1			3
		CO(MEE 11014)	2	3	3	2	1	1	1	1		1		1			3

1=weakly mapped
2= moderately mapped
3=strongly mapped

Model Question Paper

ADAMAS UNIVERSITY
SCHOOL OF ENGINEERING AND TECHNOLOGY

END-SEMESTER EXAMINATION:

Name of the Program: B. Tech Semester: IV Stream: ME
PAPER TITLE: Thermal Engineering PAPER CODE: MEE11014
Maximum Marks: 40 Time duration: 3 hours
Total No of questions: 12 Total No of Pages: 02

Instruction for the Candidate:

1. At top sheet, clearly mention Name, Univ. Roll No., Enrolment No., Paper Name & Code, Date of Exam.
2. All parts of a Question should be answered consecutively. Each Answer should start from a fresh page.
3. Assumptions made if any, should be stated clearly at the beginning of your answer.

Section A (Answer All the Questions) (5 x 1 = 5)			
1.	The efficiency and work ratio of a simple gas turbine cycle are _____	**Ap**	**CO3**
2.	The amount of heat required to raise the temperature of the unit mass of gas through one degree at constant volume, is called_____	**Ap**	**CO3**

3.	A cycle consisting of one constant pressure, one constant volume and two isentropic processes is known as _____	**Ap**	**CO4**
4.	The value of gas constant (R) in S. I. units is _____	**U**	**CO5**
5.	When cut-off ratio is _____ the efficiency of Diesel cycle approaches to Otto cycle efficiency.	**Ap**	**CO2**
	SECTION B (Attempt any **Three Questions) (3 x 5 = 15)**		
6.	Write down the working mechanism of a reciprocating compressor. What are the advantages of Multi-Staging?	**U**	**CO3**
7.	With a schematic diagram explain Regenerative Rankine Cycle. Show the process in T-S and h-s diagram.	**U**	**CO1**
8.	Derive the expression of efficiency of Diesel Cycle.	**Ap**	**CO2**
9.	With a neat sketch explain the p-h chart of a VCRS.	**Ap**	**CO4**
	SECTION C (Answer Any Two Questions) (2 x 10 = 20)		
10.	An air cooling system for a jet plane cock pit operates on the simple cycle. The cockpit is to be maintained at 25°C. The ambient air pressure and temperature ar 0.35 bar and -15°C repectively. The pressure ratio of the jet compressor is 3. The plane speed is 1000 km/hr. The air is passed through a heat exchanger after compression and cooled to its original conditions entering into the air jet. The pressure loss in heat exchanger is 0.1 bar. The pressure of air leaving the cooling turbine is 1.013 and is also the pressure in the cockpit. The cooling load in the cockpit is 70 kW. Determine i) Mass flow rate of air circulated to the cabin. ii) Net power delivered to the refrigeration system. iii) The COP of the system.	**Ap**	**CO4**
11.	Diesel cycle with compression ratio of CR = 20 : 1 and cut-off ratio $\alpha = 2$. The air is at 100 kPa = 1 bar, 20 °C (293 K), and the volume of the chamber is 500 cm^3 prior to the compression stroke. • Specific heat capacity at constant pressure of air at atmospheric pressure and room temperature: cp = 1.01 kJ/kgK. • Specific heat capacity at constant volume of air at atmospheric pressure and room temperature: cv = 0.718 kJ/kgK. • $\kappa = cp/cv = 1.4$ Calculate: 1. the mass of intake air 2. the temperature T2 3. the pressure p2 4. the temperature T3 5. the amount of heat added by burning of fuel-air mixture 6. the thermal efficiency of this cycle 7. the MEP	**U**	**CO2**
12.	The air in a room has a dry-bulb temperature of 80oF and a wet-bulb temperature of 65oF. Assuming a pressure of 14.7 psia, use the p ys chrometric chart to determine: 1. The specific humidity. 2. The relative humidity. 3. The dew point temperature.	**U**	**CO5**

MEE11027	**Metrology & Measurement**	L	T	P	C
Version 1.0		3	1	0	4
Pre-requisites/Exposure	Manufacturing Technology, Mechanical Engineering Drawing				
Co-requisites	--				

Course Objectives

1. To develop in students the knowledge of basics of Measurements, Metrology and measuring devices.
2. To understand the concepts of various measurement systems & standards with regards to realistic applications.
3. The application of principle of metrology and measurements in industries.
4. To develop competence in sensors, transducers and terminating devises with associated parameters
5. To develop basic principles and devices involved in measuring surface textures.

Course Outcomes

On completion of this course, the students will be able to

CO1 Find the significance of metrology, standards of measurement and measurement systems
CO2 Summarize the principle of Linear measuring devices, limit gauges and bevel protractor, Sine bar, Sine center, angle gauges for the measurements of angles
CO3 Determine the working principle of laser interferometers, Coordinate measuring machine and elements of machine vision system
CO4 Explain the applications of screw threads, gears and surface finish in measuring instruments
CO5 Assess the measuring techniques for Power, Force and Torque with neat sketches
CO6 Adapt the applications of different measuring devices

Catalog Description

Engineering metrology is the use of measurement science in manufacturing. The study of metrology is highly valuable for the students and practitioners, specifically from mechanical engineering stream. For a product to be successful, it needs to be manufactured according to metrological specifications, otherwise heavy costs are incurred to comply with the specifications in the later stage. Also, the role played by measurements in the day today life makes it essential to study metrology. This course is designed to impart the knowledge to develop measurement procedures, conduct metrological experiments, and obtain and interpret the results. A laboratory demonstration are also induced to enhance the learning process of lab course. The course would be useful in many areas in the traditional and modern high technology viz. manufacturing, industrial, scientific research, defense, and many others.

Course Content

Module 1: **6 lecture hours**

Definition of Metrology: Importance and scope in mechanical engineering; Types of Metrology: Scientific metrology, Industrial metrology, Legal metrology; ISO Standards and Their Role in Measurement, Overview of International Organization for Standardization (ISO), Relevant ISO standards for metrology in mechanical engineering (e.g., ISO 9001, ISO 17025, ISO 10012, ISO 2768)

Module 2: **8 lecture hours**

Linear and Angular Measurement
Linear Measuring Instruments – Evolution – Types – Classification – Limit gauges – gauge design – terminology – procedure – concepts of interchange ability and selective assembly – Angular measuring

instruments – Types – Bevel protractor clinometers angle gauges, spirit levels sine bar – Angle alignment telescope – Autocollimator – Applications.

Module 3: **8 lecture hours**

Advances in Metrology
Basic concept of lasers Advantages of lasers – laser Interferometers – types – DC and AC Lasers interferometer – Applications – Straightness – Alignment. Basic concept of CMM – Types of CMM – Constructional features – Probes – Accessories – Software – Applications – Basic concepts of Machine Vision System – Element – Applications

Module 4: **12 lecture hours**

Form Measurement

Principles and Methods of straightness – Flatness measurement – Thread measurement, gear measurement, surface finish measurement, Roundness measurement – Applications.

Mechanical Measurement

Force, torque, power – mechanical, Pneumatic, Hydraulic and Electrical type. Temperature: bimetallic strip, thermocouples, electrical resistance thermometer. Measurement of strain, displacement, speed – Reliability and Calibration – Readability and Reliability.

Module 5: **6 lecture hours**

ISO Standards and Quality Assurance in Metrology

Role of ISO in Metrology: ISO 9001, ISO 17025, and other relevant standards; Measurement Audits and Calibration Intervals; Importance of Documentation, Reporting, and Record-Keeping in Measurement; Quality Assurance Methods: ISO 10012 and best practices in quality management systems

Text Books

T1. Engineering Metrology and Measurement, Author: N V Raghavendra and Krishnamurthy, Publisher: Oxford University Press
T2. Engineering Metrology and Measurements, Author : Bentley, Publisher : Pearson Education

Reference Books

R1. Metrology and Measurement, Author: Anand Bewoor & Vinay Kulkarni, Publisher: McGraw-Hill
R2. A text book on Metrology, M. Mahajan, Dhanpat Rai & Co.

Modes of Evaluation: Quiz/Assignment/ presentation/ extempore/ Written Examination
Examination Scheme:

Components	Class Assessment	End Term
Weightage (%)	50	50

Relationship between the Course Outcomes (COs) and Program Outcomes (POs)

Course Code	Course Name	COs	PO1	PO2	PO3	PO4	PO5	PO6	PO7	PO8	PO9	PO10	PO11	PO12	PSO1	PSO2	PSO3

MEE 11027	Metrology & Measurement	CO(MEE11027).1	2				1	1	1	1		1		1	3		
		CO(MEE11027).2	2				1	1	1	1		1		1	3		
		CO(MEE11027).3	2		3		1	1	1	1		1		1	3		
		CO(MEE11027).4		3	3	2	1	1	1	1		1		1	3		
		CO(MEE11027).5			3	2	1	1	1	1		1		1	3		
		CO(MEE11027).6			3	2	1	1	1	1		1		1	3		
		CO(MEE11027)	2	3	3	2	1	1	1	1		1		1	3		

1=weakly mapped
2= moderately mapped
3=strongly mapped

Model Question Paper

ADAMAS UNIVERSITY
SCHOOL OF ENGINEERING AND TECHNOLOGY

END-SEMESTER EXAMINATION:

Name of the Program: B. Tech Semester: Stream: ME
PAPER TITLE: Metrology & Measurement
PAPER CODE: MEE11027
Maximum Marks: 40 Time duration: 3 hours

Total No of questions: 12 Total No of Pages: 02

Instruction for the Candidate:

1. At top sheet, clearly mention Name, Univ. Roll No., Enrolment No., Paper Name & Code, Date of Exam.
2. All parts of a Question should be answered consecutively. Each Answer should start from a fresh page.
3. Assumptions made if any, should be stated clearly at the beginning of your answer.

	Section A (Answer All the Questions) (5 x 1 = 5)		
1.	Write short note- Limit, Fit, Tolerance, Basic Size, and Fundamental Deviation.	**R**	**CO1**
2.	What are difference between the measurement of open channel flow and closed channel flow.	**U**	**CO2**
3.	What is comparator	**Ap**	**CO4**
4.	A 20mm dia shaft and bearing are to be assembled with a clearance fit. The tolerance and allowances are as under; Allowance=0.002mm, tolerance on hole=0.005mm, tolerance on shaft=0.003mm. Find the limits of sizes for shaft and hole if the hole basis system is used.	**U**	**CO4**
5.	State Tylor's principle of gauge making.	**R**	**CO3**
	SECTION B (Attempt any **Three Questions) (3 x 5 = 15)**		
6.	Describe the working principle and measured metrology of Bevel Protector with proper sketch.	**R**	**CO5**
7.	Explain the following elements of screw thread with proper sketch- Major Dia, Minor Dia, Effective, Dia, Thread angle, Root, Crist, Pitch, Land.	**U**	**CO3**
8.	Explain with neat sketch the method of measuring Major Diameter, Effective Diameter with proper Derivation.	**Ap**	**CO5**
9.	Explain with diagram single purchase crab winch with derivation of velocity ratio.	**R**	**CO1**
	SECTION C (Answer Any Two Questions) (2 x 10 = 20)		
10.	a) A solid shaft is subjected to a torque of 100Nm. Find the necessary shaft diameter if the allowable. Shear stress is 100N/mm2 and the allowable twist is 3º per 10 diameter length of the shaft. Take C=1X105N/mm2. b) A load dram weight is 60N. Holding 40kgf of water is to be raised from a well by means of axle. The axle is 100mm diameter & the wheel is 500mm diameter. If the force 120N is to be applied to he beam finds MA, VR & Efficiency of a simple wheel and axle.	**Ap**	**CO5**
11.	Describe the working principle and measured metrology of Micrometer with proper sketch.	**U**	**CO2**

PSG11021	**Human Values, Ethics and Psychology**	**L**	**T**	**P**	**C**
Version 1.0		**2**	**0**	**0**	**2**
Pre-requisites/Exposure	**--**				
Co-requisites	**--**				

12.	Briefly describe the working principle and mechanism of dial indicator.	**R**	**CO3**

Course Objectives

- To inculcate human values and professional ethics in students.
- To enhance the understanding of students towards personal, professional & societal relationships and achieve harmony in life.
- To develop moral responsibilities and ethical vision.

Course Outcomes

At the completion of the course, the student should be able to:

CO1. Understand the importance of values, ethics, harmony and lifelong learning in personal and professional life

CO2. Apply the knowledge to perform self-exploration and transformation augmenting harmony, peace and positivity in the surroundings

CO3. Appreciate the core values that shape the ethical behavior of a professional

Catalog Description

This course aims to develop an understanding for a movement from rule based society to a relationship based society. Apart from teaching values, this course encourages students to discover what values are for them and for society. Self-exploration also enables them to critically evaluate their pre-conditionings and present beliefs. It is designed in a way where students get familiar with the Ethical Code of Conduct, Ethical Dilemma, Conflict of Interest and all this will help them eventually in their professional life.

Course Content

Unit I: Introduction to Human Values: Character, Integrity, Credibility, Mutual Respect, Dedication, Perseverance, Humility and Perception. Self-Assessment & Analysis, Setting Life Goals,

Consciousness and Self-Transformation. Team Work, Conflict Resolution, Influencing and Winning People, Anger Management, Forgiveness and Peace, Morality, Conscience. Yoga and Spirituality

Unit II: Harmony and Life Long Learning: Harmony in human being, Nature and Existence. Harmony in family and society –Responsibilities towards society, Respecting teachers. Transition from School to College - Freedom & Responsibilities, Respecting Cultural Diversity, Learning beyond the Classrooms, Independent study and research

Unit III: Introduction to Professional Ethics: Work Ethics, Engineering Ethics, Moral Dilemma, Moral Development Theories, Ethical Theories- Kantinism, Utilitarianism, etc , Case Studies for Choice of the theory, Code of Ethics

Unit IV: Individual to Global Issues: Industrial Standards, A Balanced Outlook on Law, Safety, Responsibility, Rights, Confidentiality, Conflict of Interest, Occupational Crime, Whistle Blowing, Environmental Ethics, Business Conduct in MNC, E-Professionalism (IPR, Internet Ethics & Privacy issues)

Text Books

1. Shetty, Foundation Course in Human Values and Professional Ethics [R.R. Gaur, R. Sangal, G.P. Bagaria]

Modes of Evaluation: Quiz/Assignment/ Seminar/Written Examination Scheme:

Components	MTE	Attendance	Presentation/Assignment/ etc	ETE
Weightage (%)	20	10	30	40

Relationship between the Course Outcomes (COs) and Program Outcomes (POs)

Mapping between COs and POs		
	Course Outcomes (COs)	Mapped Programmed Outcomes
CO1	Understand the importance of values, ethics, harmony and lifelong learning in personal and professional life	PO8, PSO1 to PSO3
CO2	Apply the knowledge to perform self-exploration and transformation augmenting harmony, peace and positivity in the surroundings	PO6, PSO1 to PSO3
CO3	Appreciate the core values that shape the ethical behavior of a professional	PO8

		Engineering Knowledge	Problem analysis	Design/development of solutions	Conduct investigations of complex problems	Modern tool usage	The engineer and society	Environment and sustainability	Ethics	Individual or team work	Communication	Project management and finance	Life-long Learning	Plan the manufacturing of given mechanical components and systems using engineering analysis & design tools, process planning and modern	Understand the dynamics of machine components and design components including power transmission, pressure vessels, IC engine components	Determine the performance of thermal and fluid systems including IC engines, refrigeration and air-conditioning, and power generating systems
Course Code	Course Title	PO1	PO2	PO3	PO4	PO5	PO6	PO7	PO8	PO9	PO10	PO11	PO12	PSO1	PSO2	PSO3
PSG11021	Human Values, Ethics and Psychology						2		3					2	2	2

1=weakly mapped

2= moderately mapped

3=strongly mapped

MODEL QUESTION

Course: PSG11021 - Human Values and Professional Ethics

Programme: UG All program **Semester: IV Time: 03 hrs.**
Max. Marks:60

Instructions:

Attempt any **Four Questions** from **Section A** (each carrying 6 marks); any **Two Questions** from **Section B**

	SECTION A (Attempt any **Four Questions)**	
1.	What do you mean by happiness and Prosperity? Critically examine the prevailing notions of happiness in the society and their consequences. (Ap)	**[06]**
2.	How do the current world views lead to contradictions and dilemmas in professional life? – Explain. (An)	**[06]**
3.	What do you mean by 'Universal Human Order'? (U)	**[06]**
4.	"Physical facilities are necessary and complete for animals, while they are necessary but not complete for humans." Comment. (An)	**[06]**
5.	Why do you think that there should be emphasis on Life Long Learning in the current academic setting? (Ap)	**[06]**
	SECTION B (Attempt any **Two Questions)**	
6.	Critically examine the issues in professional ethics in the current scenario. List any five unethical practices in profession today and the methods being tried to curb them. (Ap)	**[10]**
7.	What are the implications of value based living at all four levels of living? Explain. (Ap)	**[10]**
8.	Discuss the Basic Aspects and Characteristic Features of Kohlberg's Theory and Gilligan's Theory. (U)	**[10]**
	SECTION C is Compulsory	
9.	**Case Study** **VI HI FI Hose Company** Anhydrous ammonia is used to fertilize the crops. The anhydrous ammonia reacts violently with water. Pressurized tanks provided with wheels carry this fertilizer, and tanks are pulled by tractors. Farmers take these tanks on rent. They take on rent or purchase the hose to carry this ammonia from the tank to perforated blades that dig into the soil and spread ammonia. Leaks from the hose are very dangerous. In the past, the hoses were made of steel-mesh reinforced rubber, which were similar to automobile tyres. Later, the reinforced-plastic hoses were introduced and they satisfied the standards. The VI HI FI has been marketing these hose to the farmers. The officials of the company arranged for testing the hose as a consultancy work in the Agricultural College. The tests indicated that the plastic did not react initially to the anhydrous	**[8+8]**

ammonia. But over the years, the plastic was found to degrade and lose some mechanical properties. Hence, the company attached warnings on all the hoses, indicating that they should be replaced periodically.

After a few years of use of the product in the market, several accidents occurred where the hoses ruptured during use and severely injured and blinded the farmers. Legal action followed and the company argued in defense that the farmers had misused the hoses and not heeded the replacement warnings. But they have to make substantial out-of-court settlements. The company then dropped the product line and advertised in the press asking the farmers to turn-in their hoses for full refunds. The advertisement stated that the hoses are 'obsolete', and not that are unsafe.

(*a*) What are the factual, conceptual and normative issues? (An)

(*b*) What are the methods suggested for resolving these issues? (Ap)

MEE12007	**Material Testing Lab**	L	T	P	C
Version 1.0		0	0	2	1
Pre-requisites/Exposure	Materials Engineering, Mechanics of Materials				
Co-requisites	--				

Course Objectives:

1. Ability to apply knowledge of mathematics and engineering in calculating the mechanical properties of structural materials.
2. Ability to function on multi-disciplinary teams in the area of materials testing.
3. Ability to use the techniques, skills and modern engineering tools necessary for engineering.
4. Understanding of professional and ethical responsibility in the areas of material testing.
5. Ability to communicate effectively the mechanical properties of materials

Course Outcomes:

After successful completion of the course, the students will be able to:

1. Outline the basic knowledge of mathematics and engineering in finding the strength in tension, compression, shear and torsion.
2. Understand engineering problems of structural elements subjected to flexure.
3. Experiment on engineering problems of structural elements subjected to flexure.
4. Analyze engineering problems of structural elements subjected to flexure.
5. Evaluate the impact of engineering solutions on the society and also will be aware of contemporary issues regarding failure of structures due to unsuitable materials.
6. Adapt the applications of various material testing techniques

Catalogue Description:

Materials testing is a highly specialised area, requiring expert knowledge and accurate results. We offer a comprehensive range of material testing courses, covering a wide range of specific techniques, including non-destructive testing (NDT) and the functional safety of equipment.

Course Content

List of Experiments (Any ten)	
1	Rockwell Hardness Test
2	Brinell Hardness Test
3	Charpy Impact Test.
4	Izod Impact Test.
5	Tensile Test.
6	Spring Test for Tension.
7	Spring Test for Compression.
8	Fatigue Test
9	Study of microstructure of annealed and normalized carbon steel.
10	Study of microstructure of hardened and tempered carbon steel.
11	Cupping test

Reference Books

1. Davis, Troxell and Hawk, "Testing of Engineering Materials", International Student Edition – McGraw Hill Book Co. New Delhi.
2. M L Gambhir and Neha Jamwal, "Building and construction materialsTesting and quality control", McGraw Hill education(India)Pvt. Ltd., 2014
3. Fenner, " Mechanical Testing of Materials", George Newnes Ltd. London.
4. Holes K A, "Experimental Strength of Materials", English Universities Press Ltd. London.
5. Suryanarayana A K, "Testing of Metallic Materials", Prentice Hall of India Pvt. Ltd. New Delhi.
6. Kukreja C B, Kishore K. and Ravi Chawla "Material Testing Laboratory Manual", Standard Publishers & Distributors 1996.
7. Relevant IS Codes

Modes of Evaluation: Quiz/Assignment/ presentation/ extempore/ Written Examination

Examination Scheme:

Components	Class Assessment	End-Term
Weightage (%)	50	50

Relationship between the Course Outcomes (COs) and Program Outcomes (POs)

Course Code	Course Name	COs	PO1	PO2	PO3	PO4	PO5	PO6	PO7	PO8	PO9	PO10	PO11	PO12	PSO1	PSO2	PSO3
MEE12007	Material Testing Lab	CO(MEE12007).1	2				1	1	1	1		1		1		3	
		CO(MEE12007).2	2				1	1	1	1		1		1		3	
		CO(MEE12007).3	2		3		1	1	1	1		1		1		3	
		CO(MEE12007).4		3	3	2	1	1	1	1		1		1		3	
		CO(MEE12007).5			3	2	1	1	1	1		1		1		3	
		CO(MEE12007).6			3	2	1	1	1	1		1		1		3	
		CO(MEE12007)	2	3	3	2	1	1	1	1		1		1		3	

1=weakly mapped,
2= moderately mapped,
3=strongly mapped

Name: **Enrolment No:**	

Course: MEE12007 – Material Testing Lab

Program: B.Tech. **Semester: IV**

Time: 03 hrs. **Max. Marks: 40**

Instructions:

Attempt the Questions from (Carrying 40 Marks)

(Answer the Questions) (40 x 1 = 40)

Sl. No.	Laboratory Questions	Knowledge Level
1	Determine the Rockwell hardness number on B and C scales for a given metallic specimen	**Evaluate**
2	Determine the hardness number for a given metallic specimen by Brinell Test (HB).	**Evaluate**
3	Determine the impact energy/Impact strength of a given test specimen by Izod test	**Evaluate**
4	Study the behavior of mild steel when subjected to a gradually increasing torsional load and to determine the rigidity modulus & modulus of rupture (torsion).	**Evaluate**
5	Study the stress-strain behavior of mild steel test specimen under a gradually increasing tensile load and to determine the Young's modulus of elasticity, yield stress, tensile strength, percentage elongation & percentage reduction in cross sectional area.	**Evaluate**
6	Study the behavior of given specimen subjected to pure bending and to determine the Young's modulus of elasticity and modulus of rupture (bending).	**Evaluate**

MEE12035	Metrology & Measurement Lab	L	T	P	C
Version 1.0		0	0	2	1
Pre-requisites/Exposure	Manufacturing Technology-I				
Co-requisites	--				

Course Objectives

1. To develop in students the knowledge of basics of Measurements, Metrology and measuring devices.
2. To understand the concepts of various measurement systems & standards with regards to realistic applications.
3. The application of principle of metrology and measurements in industries.
4. To develop competence in sensors, transducers and terminating devises with associated parameters
5. To develop basic principles and devices involved in measuring surface textures.

Course Outcomes

On completion of this course, the students will be able to

CO1 Find the significance of metrology, standards of measurement and measurement systems
CO2 Summarize the principle of Linear measuring devices, limit gauges and bevel protractor, Sine bar, Sine center, angle gauges for the measurements of angles
CO3 Determine the working principle of laser interferometers, Coordinate measuring machine and elements of machine vision system
CO4 Explain the applications of screw threads, gears and surface finish in measuring instruments
CO5 Assess the measuring techniques for Power, Force and Torque with neat sketches
CO6 Adapt the applications of different measuring devices

Catalog Description

Study of fundamentals of Manufacturing Process and hence educate the students about the scope of the subject. To train the students in the metal cutting domain so as to equip them with adequate knowledge about the various processes like turning, shaping, planning, drilling, milling and grinding. To emphasize upon the prominent theories, concepts and constructional features, machining time, applications of machine tools related to them. To provide an insight about the cutting tool geometry, cutting tool material, tool life, formation of chips, requirements of cutting fluid. To lay groundwork for further studies in manufacturing stream. Theoretical teaching is accompanied by practical examples, case studies and laboratory demonstrations. Theoretical teaching is accompanied by practical examples, case studies and laboratory demonstrations.

Course Content

List of Experiments (Any ten)	
1.	Determination of linear measurement of a part using Vernier Height Gauge.
2.	Determination of linear measurement of a part using Vernier Depth Gauge.
3.	Determination of linear measurement of a part using Vernier Caliper.
4.	Determination of linear measurement of a part using Micrometer.
5.	Determination of radius, gap & thread using Radius gauge, Feeler gauge and Screw pitch gauge.
6.	Determination of angular measurement of a part using Sine Bar.

7.	Determination of angular measurement of a part using Bevel Protractor.
8.	Determination of Length, Width and Angle by using Profile Projector.
9.	Determination of surface roughness by Talysurf apparatus.
10.	Determination of air velocity by Anemometer.
11.	Calibration of load cell using strain gauge.
12.	Calibration of thermo-couple for temperature measurement.
13.	Calibration of Bourdon tube pressure gauge using dead weight type pressure tester.

Text Books

T1. Machining and Machine Tools, A. B. Chattopadhyay, Wiley-India

T2. Principles of Machine Tools, G. C. Sen and A. Bhattacharyya, New Central Book Agency

Reference Books

R1. Fundamentals of Machining and Machine Tools, G. Boothroyd and W. A. Night, CRC Press

R1. Metal Cutting Theory and Practice, A. Bhattacharyya, New Central Book Agency

Modes of Evaluation: Quiz/Assignment/ presentation/ extempore/ Written Examination
Examination Scheme:

Components	Class Assessment	End Term
Weightage (%)	30	40

Relationship between the Course Outcomes (COs) and Program Outcomes (POs)

Course Code	Course Name	COs	PO1	PO2	PO3	PO4	PO5	PO6	PO7	PO8	PO9	PO10	PO11	PO12	PSO1	PSO2	PSO3
MEE12035	Metrology & Measurement Lab	CO(MEE12035).1	2				1	1	1	1		1		1	3		
		CO(MEE12035).2	2				1	1	1	1		1		1	3		
		CO(MEE12035).3	2		3		1	1	1	1		1		1	3		
		CO(MEE12035).4		3	3	2	1	1	1	1		1		1	3		
		CO(MEE12035).5			3	2	1	1	1	1		1		1	3		
		CO(MEE12035).6			3	2	1	1	1	1		1		1	3		
		CO(MEE12035)	2	3	3	2	1	1	1	1		1		1	3		

Name: **Enrolment No:**	

Course: METROLOGY & MEASUREMENT LAB (MEE12035)

Program: B.Tech. **Semester: 5th**

Time: 03 hrs. **Max. Marks: 40**

Instructions:

Attempt the Questions from (Carrying 40 Marks)

(Answer the Questions) (40 x 1 = 40)

Sl. No.	Laboratory Questions	Knowledge Level
1	Determination of linear measurement of a part using Vernier Depth Gauge.	**Evaluate**
2	Determination of linear measurement of a part using Micrometer.	**Evaluate**
3	Determination of Length, Width and Angle by using Profile Projector.	**Evaluate**
4	Calibrate Bourdon tube pressure gauge using dead weight type pressure tester.	**Apply**

MEE12036	Thermal Engineering Lab	L	T	P	C
Version 1.0		0	0	2	1
Pre-requisites/Exposure	Engineering Thermodynamics, Heat Transfer				
Co-requisites	--				

Course Objectives:

1. This course aims to provide a good platform to mechanical engineering students to understand, model and appreciate concept of dynamics involved in thermal energy transformation.
2. To prepare them to carry out experimental investigation and analysis at later stages of graduation.

Course Outcomes:

After successful completion of the course, the students will be able to:

1. Retrieve the knowledge of mathematics, science and engineering fundamentals to model the energy conversion phenomenon.
2. Summarize power production based on the fundamental laws of thermal engineering.
3. To investigate the effectiveness of energy conversion process in mechanical power generation for the benefit of mankind.
4. Examine the concepts learnt in thermodynamics how to sustain in energy crisis and think beyond curriculum in the field of alternative and renewable sources of energy.
5. Test effectively the concepts of heat exchangers and try to think beyond curriculum in alternative sources of energy.
6. Adapt the principles of thermodynamics during experimentation

Catalogue Description:

Applied Thermodynamics & Heat Transfer laboratory provides fundamental and industrial knowledge about modes of heat transfer, like conduction, convection and radiation, and their application. Heat Transfer Lab consists of the following equipments. Pin Fin Apparatus: This setup is designed to study the heat transfer in a pin fin. It consists of cylindrical fin fitted to the base in rectangular duct. A blower is provided on one side of duct to conduct experiments under forced convection heat transfer mode. Five thermocouples are embedded along the axis of the cylindrical fin at five different locations and one thermocouple placed in the air stream at the exit of the test section to measure the outlet air temperature. Digital Temperature Indicator is provided to read temperatures distribution along the fin. Test pipe is connected to the delivery side of the blower along with the Orifice to measure flow of air through the pipe. A heater heats one end of fin and heat flows to another end. Heat input to the heater is given through variac. Students will be expected to develop the following skills/understanding upon the successful completion of this experiment.

Course Content

List of Experiments (Any ten)	
1	To determine dryness fraction of steam by using separating throttling calorimeter
2	To determine the mechanical efficiency of a four stroke single cylinder diesel engine
3	To calculate the opening and closing time of the inlet valve and the exhaust valve of an I.C. Engine and draw a valve timing diagram
4	To study the constructional details of different fire tube and water tube boilers
5	To determine the Thermal conductivity of insulating powder

6	To determine the Thermal conductivity of a metal bar
7	To determine the effectiveness and rate of heat transfer of pin fin for Natural convection mode
8	To determine the effectiveness and rate of heat transfer of pin fin for Forced convection mode
9	To study Radiation heat transfer using the Stefan Boltzmann apparatus and determine the emissivity of a given gray body
10	To study the transfer of energy between two fluids for parallel flow of concentric tube heat exchanger
11	To study the transfer of energy between two fluids for counter flow of concentric tube heat exchanger

Reference Books

1. Incropera, F.P. and Dewitt, D.P., Fundamentals of Heat and Mass Transfer, 5th ed., John Wiley, 2002.
2. Holman, J.P., Heat Transfer, 9 th ed., Tata McGraw-Hill, 2004.
3. Ozisik, M.N., Heat Transfer - A Basic Approach, McGraw-Hill, 1985.
4. Cengel, Y.A., Heat Transfer - A Practical Approach, McGraw-Hill, 1998.

Modes of Evaluation: Quiz/Assignment/ presentation/ extempore/ Written Examination
Examination Scheme:

Components	Class Assessment	End-Term
Weightage (%)	50	50

Relationship between the Course Outcomes (COs) and Program Outcomes (POs)

Course Code	Course Name	COs	PO1	PO2	PO3	PO4	PO5	PO6	PO7	PO8	PO9	PO10	PO11	PO12	PSO1	PSO2	PSO3
MEE12036	Thermal Engineering Lab	CO(MEE12036).1	2				1	1	1	1		1		1			3
		CO(MEE12036).2	2				1	1	1	1		1		1			3
		CO(MEE12036).3	2		3		1	1	1	1		1		1			3
		CO(MEE12036).4		3	3	2	1	1	1	1		1		1			3
		CO(MEE12036).5			3	2	1	1	1	1		1		1			3
		CO(MEE12036).6			3	2	1	1	1	1		1		1			3
		CO(MEE12036)	2	3	3	2	1	1	1	1		1		1			3

1=weakly mapped,
2= moderately mapped,
3=strongly mapped

Name: **Enrolment No:**	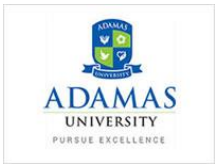

Course: MEE12036 – Thermal Lab

Program: B.Tech. **Semester: VII**

Time: 03 hrs. **Max. Marks: 40**

Instructions:

Attempt the Questions from (Carrying 40 Marks)

(Answer the Questions) (40 x 1 = 40)

Sl. No.	Laboratory Questions	Knowledge Level
1	**Draw** the heat balance sheet from the data given below which boiler generating 500 kg/hr of steam at 10.5 bar pressure and 0.97 dryness fraction. Fuel used and its calorific value : 75kg/hr and 31500KJ/kg Moisture present in the fuel : 6% by mass ; Mass of dry flue gases : 10kg/kg of fuel Temp. of flue gases : 315°C Specific heat of flue gases : 1.1 KJ/kgK Temperature of boiler room : 38°C Feed water temperature : 50°C	**Evaluate**
2	**Draw** the Actual valve timing diagram of 4- stroke petrol engine	**Evaluate**
3	**Determine** the Calorific Value of Fuels by using different calorimeters	**U**
4	**Determine** the of Dryness fraction by using different Calorimeters.	**Apply**
5	**Determine** average heat transfer coefficient for a externally heated horizontal pipe under forced convection & plot Reynolds and Nusselt numbers along the length of pipe. Also compare the results with those of the correlations.	**Apply**
6	**Determine** the water side overall heat transfer coefficient on a cross-flow heat exchanger	**Evaluate**

MEE11026	Heat Transfer	L	T	P	C
Version 1.0		3	1	0	4
Pre-requisites/Exposure	Mathematics (Differential Equation), Thermodynamics, Fluid Mechanics				
Co-requisites	Applied Thermodynamics and Heat Transfer Lab				

Course Objectives

1. To help the students for understand thermal conductivity of solids, liquids and gases under steady and unsteady states.
2. To enable students for determine the heat transfer by convection for flow over a flat plate and flow through a pipe.
3. To give the students in preliminary idea about the radiative heat transfer of black and grey bodies.
4. To enable students for differentiate the type of heat exchangers, develop concept about overall heat transfer coefficient, NTU method.
5. To help the students for understand the concept of different boundary layer thickness, lift and drag.

Course Outcomes

On completion of this course, the students will be able to

CO1. Tabulate the thermal conductivity of solids, liquids and gases under steady and unsteady states.
CO2. Estimate the heat transfer by convection for flow over a flat plate.
CO3. Examine the radiative heat transfer in black and grey bodies.
CO4. Analyze heat exchangers according to the LMTD value.
CO5. Review the concept of different boundary layer thickness.
CO6. Solve various problems related to different modes of heat transfer.

Catalog Description

Heat transfer has broad applications such as automotive industry, aerospace, chemical process industry, energy, refrigeration and air-conditioning, domestic and biomedical. The current course covers fundamentals of heat and mass transfer. In term of heat transfer, three modes of heat transfer: conduction, convection and radiation. Conduction covers for planar, cylindrical and spherical geometries as well as extended surface. Convection heat transfer covers for laminar and turbulent flow regimes. Radiation heat transfer covers general characteristics of radiation as well as the properties of radiating surfaces. Types of heat exchanger and heat exchangers design. Fundamentals of mass transfer.

Course Content

Module 1: Heat Conduction — 10 lecture hours

General Differential equation of Heat Conduction– Cartesian and Polar Coordinates – One Dimensional Steady State Heat Conduction — plane and Composite Systems – Conduction with Internal Heat Generation

Module 2: Heat Convection — 8 lecture hours

Free and Forced Convection – Hydrodynamic and Thermal Boundary Layer. Free and Forced Convection during external flow over Plates and Cylinders and Internal flow through tubes.

Module 3: Heat Radiation — 10 lecture hours

Black Body Radiation – Grey body radiation – Shape Factor – Electrical Analogy – Radiation Shields. Radiation through gases.

Module 4: Heat Exchangers — 6 lecture hours

Heat Exchanger Types – Overall Heat Transfer Coefficient – Fouling Factors – Analysis – LMTD method – NTU method.

Module 5: Boundary Layer — 6 lecture hours

Laminar flow, Turbulent flow, Boundary Layer thickness, Momentum integral equation.

Text Books

1. Heat and Mass Transfer, Yunus A. Cengel, The McGraw-Hill Companies.

2. Heat & Mass Transfer, O.P. Single, Macmillan India.

Reference Books

1. Heat Transfer, Alan Chapman, Pearson India.
2. Numerical Heat Transfer & Fluid flow, S.V.Patenkar, Hemisphere New York (1999)
3. Fundamentals of Heat and Mass Transfer, Incropera, DeWitt, Bergmam & Lavine, Wiley India Edn.

Open Sources:

- http://nptel.ac.in
- http:// ocw.mit.edu/courses/mechanical-engineering
- http://www.myopencourses.com/discipline/mechanical-engineering

Modes of Evaluation: Quiz/Assignment/ presentation/ extempore/ Written Examination

Examination Scheme:

Components	Class Assessment	End Term
Weightage (%)	50	50

Relationship between the Course Outcomes (COs) and Program Outcomes (POs)

Course Code	Course Name	COs	PO1	PO2	PO3	PO4	PO5	PO6	PO7	PO8	PO9	PO10	PO11	PO12	PSO1	PSO2	PSO3
MEE1 1026	Heat Transfer	CO(MEE11 026).1	2				1	1	1	1		1		1			3
		CO(MEE11 026).2	2				1	1	1	1		1		1			3
		CO(MEE11 026).3	2		3		1	1	1	1		1		1			3
		CO(MEE11 026).4		3	3	2	1	1	1	1		1		1			3
		CO(MEE11 026).5			3	2	1	1	1	1		1		1			3
		CO(MEE11 026).6			3	2	1	1	1	1		1		1			3
		CO(MEE11 026)	2	3	3	2	1	1	1	1		1		1			3

1=weakly mapped
2= moderately mapped
3=strongly mapped

Model Question Paper

ADAMAS UNIVERSITY
SCHOOL OF ENGINEERING AND TECHNOLOGY

END-SEMESTER EXAMINATION:

Name of the Program: B. Tech Semester: VI Stream: ME
PAPER TITLE: Heat Transfer
PAPER CODE: MEE11026
Maximum Marks: 40 Time duration: 3 hours
Total No of questions: 12 Total No of Pages: 02

Instruction for the Candidate:

1. At top sheet, clearly mention Name, Univ. Roll No., Enrolment No., Paper Name & Code, Date of Exam.
2. All parts of a Question should be answered consecutively. Each Answer should start from a fresh page.
3. Assumptions made if any, should be stated clearly at the beginning of your answer.

Section A (Answer All the Questions) (5 x 1 = 5)			
1.	What is the meaning of thermal equilibrium condition?	**Ap**	**CO1**
2.	What is the difference between the Thermal Conductivity & Coefficient of Convection?	**Ap**	**CO2**
3.	How is natural convection different from forced convection?	**Ap**	**CO2**
4.	What is the meaning of Fin? 'Mountain is a fins'---Justify this statement.	**U**	**CO1**
5.	What is Fourier Number?	**Ap**	**CO3**
	SECTION B (Attempt any **Three Questions) (3 x 5 = 15)**		
6.	What is Logarithmic mean area for hollow cylinder? Derive the expression of heat conduction through a composite cylinder where the heat flows from hot fluid to cold fluid across a two different metal boundary. The following data is given L=Length of composite cylinder K_1=thermal conductivity of metal 1 K_2=thermal conductivity of metal 2 T_1=temperature of the surface-1 of Metal 1 T_2=temperature of the junction of metal-1 and metal 2 T_3=temperature of the surface 2 of metal 2 T_{hf}=temperature of the hot fluid T_{cf}= temperature of the cold fluid H_{hf}=Heat transfer coefficient from hot fluid to metal surface H_{cf}=Heat transfer coefficient from metal surface to cold fluid (5)	**U**	**CO1**
7.	Derive an energy equation for thermal boundary layer over a flat plate.	**U**	**CO5**
8.	State the Stefan-Boltzmann law for Emissive power of heat radiation. Define the Absorptivity, Reflectivity, Transmissivity for radiation modes of heat transfer?	**Ap**	**CO3**
9.	What is heat exchanger? Derive the expression for LMTD of counter flow heat exchanger?	**Ap**	**CO4**
	SECTION (Answer Any Two Questions) (2 x 10 = 20)		
10.	Describe the Fourier's Law of Heat Conduction. Derive the general heat conduction equation in cylindrical coordinates with the following boundary condition is applied- heat flow radially, Steady state and no heat generation in the system.	**Ap**	**CO1**
11.	a) Write a short note of Pradtl number and Grashoff number. b) A vertical cylinder 1.5 m high and 180mm in diameter is maintained at 100^0C in an atmosphere environment of 20^0C. Calculate heat loss by free convection from the surface of the cylinder. Assume properties of air at mean temperature as, ρ=1.06Kg/m^3, v=18.97x$10^{(-6)}$ m^2/s, C_p=1.004KJ/Kg^{0}C and k=0.1042KJ/mh^{0}C	**Ap**	**CO2**
12.	a) What is heat exchanger? Derive the expression for LMTD of counter flow heat exchanger? b) A counter flow double pipe heat exchanger using superheated steam is used to hot water at the rate of 10500kg/h. The steam enters the heat exchanger at 180ºC and leaves at 130ºC. The inlet and exit temperature of water are 30ºC and 80ºC	**U**	**CO4**

	respectively. If overall heat transfer coefficient from steam to water is 814w/m^{2o}C, Calculate the heat transfer area. What would be the increase in area if the fluid flows were parallel?		

MEE11010	Mechanisms & Machines	L	T	P	C
Version 1.0		3	1	0	4
Pre-requisites/Exposure	Engineering Mechanics				
Co-requisites	--				

Course Objectives:

1. To understand the kinematics and rigid- body dynamics of kinematically driven machine components.
2. To understand the motion of linked mechanisms in terms of the displacement, velocity and acceleration at any point in a rigid link.
3. To be able to design some linkage mechanisms and systems to generate specified output motion.
4. To understand the kinematics of gear trains
5. To be able to solve problems related to cam and follower

Course Outcomes:

On completion of this course, the students will be able to

1. Identify various mechanisms, which can be used under different situations in different machines
2. Estimate displacement, velocity and acceleration of different components of machines
3. Determine the type of gear mechanisms to be used for different machinery applications
4. Explain the type of drives to be used for different machinery applications
5. Review different cam-follower mechanisms for motion control
6. Simulate the working of different mechanisms

Catalogue Description:

Mechanisms have considerable fascination for most students of engineering as the theoretical principles involved have immediate applications to practical problems. The main objective of this course is to give a clear understanding of the concepts underlying engineering design. The course involves the kinematics and dynamics of machines. The focus is to empower the students with the theoretical and practical knowledge of mechanisms and machines to enable them to solve complex engineering problems.

Course Content

8 lecture hours

Module 1: Basics of Mechanisms and Machines

Links, Kinematic Pair, Types of Joints, Degree of Freedom, Classification of Kinematic Pairs, Kinematic Chain, Linkage, Mechanism and Structure.

12 lecture hours

Module 2: Velocity and Acceleration Analysis of Mechanisms

Absolute and Relative Motion, Velocity analysis of simple mechanisms: Graphical and Instantaneous Centre Methods, Acceleration Diagrams for four bar mechanisms, Coriolis's Acceleration

6 lecture hours

Module 3: Belt Drives

Types of belt drives, Velocity ratio of drives, Slip and creep in belt drive, angle of contact, length of belt, Power transmitted by belt drive, centrifugal tension and maximum tension in belt drives

8 lecture hours

Module 4: Kinematics of Gear and Gear Train

Spur Gears: Gear terminology, law of gearing, path of contact, arc of contact, contact ratio. Interference in involute gears, methods of avoiding interference. Gear Trains: Simple gear trains, compound gear trains, epicyclical gear trains

6 lecture hours

Module 5: Kinematics of Cam and Followers

Cams: Types of cams, types of followers, displacement, velocity and acceleration curves for uniform velocity, Simple Harmonic Motion.

Text Books

1. “Theory of Machines”, S.S Rattan., Tata McGraw-Hill, 3rd Edition, 2009.

2."Kinematics and Dynamics of Machinery", Robert L. Norton, Tata McGraw-Hill, 1st Edition, 2009.

Reference Books

1. . “Theory of Mechanisms and Machines", A. Ghosh and A.K., Mallick, East-West Pvt. Ltd., 3rd Edition, 2001.
2. "Mechanisms and Machine Theory", J.S. Rao and R. V. Dukkipati, Wiley-Eastern Ltd., 2nd Edition, 2008.
3. “Theory of Machines and Mechanisms”, J.J. Uicker, G.R. Pennock and J. E. Shigley, Oxford University Press, 3rd Edition, 2009.
4."Theory of Machines", Thomas Bevan, CBS Publishers and Distributors, 3rd Edition, 2005.

Modes of Evaluation: Quiz/Assignment/ presentation/ extempore/ Written Examination
Examination Scheme:

Components	Attendance	Internal Assessment	MTE	ETE
Weightage (%)	10	30	20	40

Relationship between the Course Outcomes (COs) and Program Outcomes (POs)

Course Code	Course Name	COs	PO1	PO2	PO3	PO4	PO5	PO6	PO7	PO8	PO9	PO10	PO11	PO12	PSO1	PSO2	PSO3
MEE 11010	Mechanisms & Machines	CO(MEE11010).1	2				1	1	1	1		1		1		3	
		CO(MEE11010).2	2				1	1	1	1		1		1		3	
		CO(MEE11010).3	2		3		1	1	1	1		1		1		3	
		CO(MEE11010).4		3	3	2	1	1	1	1		1		1		3	
		CO(MEE11010).5			3	2	1	1	1	1		1		1		3	
		CO(MEE11010).6			3	2	1	1	1	1		1		1		3	
		CO(MEE11010)	2	3	3	2	1	1	1	1		1		1		3	

1=weakly mapped
2= moderately mapped
3=strongly mapped

Name:

Enrolment No:

Course: Machines & Mechanism (MEE11010)

Program: B.Tech. (ME) **Semester: IV**

Time: 03 hrs. **Max. Marks: 40**

Instructions:

Attempt **Five Questions** compulsory from **Section A** (each carrying 1 marks); any **Three Questions** from **Section B** (each carrying 5 marks)**, any Two Questions** from **Section C** (each carrying 10 marks)**.**

SECTION A (Compulsory)

1.		**Knowledge Level**	**CO**
a)	For an open belt drive, length of belt is L. When the centre distance between the pulleys is doubled, the required length of belt will be _____.	**Ap**	**CO4**
b)	For a ball bearing, under what condition the kinematic pair constituted by a ball and the inner race will qualify to be a lower pair?	**U**	**CO1**
c)	Why is a cycloidal motion programme most suitable for high speed cams?	**U**	**CO5**
d)	A gear set with 200 pressure angle has maximum paths of approach and recess as 20 mm and 30 mm, respectively. The centre distance for the gear set is _____ mm.	**Ap**	**CO3**
e)	Using a suitable example, explain the method to predict the number of instantaneous centres in a mechanism?	**U**	**CO2**
SECTION B (Answer any Three Questions)			
2.	A linkage has 14 links and the number of loops is 5. Assuming all the pairs are turning pairs, calculate its (i) degrees of freedom (ii) number of joints.	**Ap**	**CO1**
3.	A V-belt weighing 1.6 kg/m run has an area of cross-section of 750 mm^2. The angle of lap is 165^0 on the smaller pulley which has groove angle of 40^0, $\mu = 0.12$. The maximum safe stress in the belt is 9.5 N/mm^2. What is the power that can be transmitted by the belt at a speed of 20 m/s.	**Ap**	**CO4**
4.	On visual inspection, interference marks were observed on the involute teeth of the meshing gears of an industrial machine. The unit was reassembled without changing the gears, and interference didn't occur thereafter. Infer the trick employed to avoid interference.	**An**	**CO3**

5.	A symmetrical circular cam operates a flat-faced follower with a lift of 30 mm. The minimum radius of the cam is 50 mm and the nose radius is 12 mm. The angle of lift is 80^0. If the speed of the cam is 210 rpm, find the main dimensions of the cam.	**Ap**	**CO5**
	SECTION C (Answer any Two Questions)		
6.	For the four link mechanism shown in the figure, find the angular velocities of the links ***BC*** and ***CD*** using the instantaneous centre method. 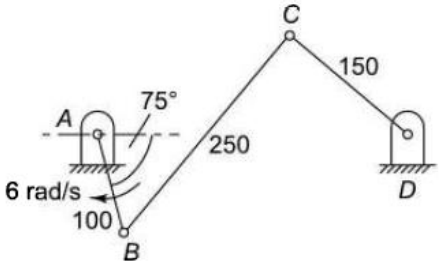	**Ap**	**CO2**
7.	As shown below, gears 2, 4 and 5 have 24, 40 and 144 teeth respectively. Gear 5 is fixed. Gear 2 is rotating clockwise at 700 rpm. What will be the rpm of the arm 3 and gear 4? 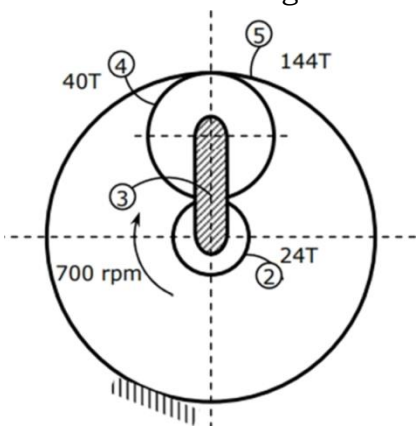	**Ap**	**CO3**
8.	The pulleys of two parallel shafts that 8 m apart are 600 mm and 800 mm in diameters and are connected by a crossed belt. It is needed to change the direction of rotation of the driven shaft by adopting the open-belt drive. Calculate the change in length of the belt.	**Ap**	**CO4**

MEE11008	**Fluid Machinery**	L	T	P	C
Version 1.0		3	1	0	4
Pre-requisites/Exposure	Engineering Physics, Fluid Mechanics				
Co-requisites	Fluid Mechanics & Hydraulic Machines Lab (MEE12012)				

Course Objectives

1. The course on fluid mechanics is devised to introduce fundamental aspects of fluid flow behaviour.
2. Students will learn to develop steady state mechanical energy balance equation for fluid flow systems, estimate pressure drop in fluid flow systems and determine performance characteristics of fluid machinery.

Course Outcomes

On completion of this course, the students will be able to

CO1: Identify various types of Blowers & compressor and their working
CO2: Compare the basic cycles and calculations involved in the operation of steam and gas turbines.
CO3: Examine the working of Pelton, Francis, Kaplan turbines and pumps along with their performance parameters.
CO4: Analyze energy transfer in turbo-machine.
CO5: Validate aerofoil section applying to lift and drag concepts.
CO6: Solve various problems related to different types of fluid machines

Catalog Description

Hydraulics is the section of fluid mechanics which describes production, transmission and conversion of energy during mutual interaction of fluids and mechanisms in motion. This course starts from the deep fundamentals of fluid dynamics accompanied at later stages by an overall description of technical solutions used in machinery. The main objective of the course is to learn basic principles of fluid power generation, transmission and conversion with the use of hydraulic machines and supplementary passive equipment.

Course Content

Module	Course content	Lecture Houre
1	**Impact of jets and Jet Propulsions:** Forse extracted by Jet on Stationary and Moving Plate (Vertical, Inclined, Curved surface). Force extracted by Jet of Water on a Series of Vanes and Radial curved vanes. Introduction to jet propulsion. Jet propulsion of a Tank with an Orifice. Jet propulsion of Ships.	6
2	**Hydraulic Turbines:** Impulse and Reaction Turbines, Degree of reaction – Pelton Wheel – Constructional features - Velocity triangles - Design of Pelton wheel – Inward and outward flow reaction turbines - Francis Turbine – Constructional features – Velocity triangles, work done and efficiencies. Axial flow turbine (Kaplan): Constructional features – Velocity triangles- work done and efficiencies – Characteristic curves of turbines – Specific speed of turbine. Theory of draft tubes – surge tanks – Cavitation in turbines.	12

3	**Rotodynamic Pumps:** Centrifugal pump impeller types, - velocity triangles- manometric head- work, efficiency and losses, H-Q characteristic. Cavitation in centrifugal pumps- NPSH required and available. Type number-Pumps in series and parallel operations. Performance characteristics- Specific speed. Reciprocating pump – Single acting and double acting- slip, negative slip and work required and efficiency indicator diagram- acceleration head - effect of acceleration and friction on indicator diagram – speed calculation.	12
4	**Compressors:** classification of compressors, reciprocating compressor-single stage compressor, equation for work with and without clearance volume, efficiencies, multistage compressor, intercooler, free air delivered (FAD)	8
5	**Turbo machines:** Definition of turbo machine, parts of turbo machines, Comparison with positive displacement machines, Classification, Dimensionless parameters and their significance, Effect of Reynolds number, Unit and specific quantities, model studies.	6

Text Books:

1. Hydraulics and Fluid Mechanics, P.N. Modi and S.N. Seth, Standard Book House, Delhi, India.
2. Hydraulics and Fluid Mechanics, S. Ramamnitham, Dhanpat Rai & Sons, Delhi, India.

Reference Books:

1. Fluid Mechanics and Hydraulic Machines, Domkundwar & Domkundwar, Dhanpatrai & Co.
2. Fluid Mechanics and Fluid Power Engineering, D.S. Kumar, Kotaria & Sons
3. Experimental Fluid Mechanics, Asawa,G.L, , NemChand and Bros. Vol.1

Open Sources:

- http://nptel.ac.in
- http:// ocw.mit.edu/courses/mechanical-engineering
- http://www.myopencourses.com/discipline/mechanical-engineering

Modes of Evaluation:

Components	Class Assessment	End Term
Weightage (%)	**50**	**50**

Relationship between the Course Outcomes (COs) and Program Outcomes (POs)

Course Code	Course Name	COs	PO1	PO2	PO3	PO4	PO5	PO6	PO7	PO8	PO9	PO10	PO11	PO12	PSO1	PSO2	PSO3
MEE11008	Fluid Machinery	CO(MEE11008).1	2				1	1	1	1		1		1			3
		CO(MEE11008).2	2				1	1	1	1		1		1			3
		CO(MEE11008).3	2		3		1	1	1	1		1		1			3
		CO(MEE11008).4		3	3	2	1	1	1	1		1		1			3
		CO(MEE11008).5			3	2	1	1	1	1		1		1			3
		CO(MEE11008).6			3	2	1	1	1	1		1		1			3
		CO(MEE11008)	2	3	3	2	1	1	1	1		1		1			3

1=weakly mapped
2= moderately mapped
3=strongly mapped

Model Question Paper

ADAMAS UNIVERSITY
SCHOOL OF ENGINEERING AND TECHNOLOGY

END-SEMESTER EXAMINATION:

Name of the Program: B. Tech Semester: V Stream: ME
PAPER TITLE: Fluid Machinery
PAPER CODE: MEE11008
Maximum Marks: 40 Time duration: 3 hours
Total No of questions: 12 Total No of Pages: 02

Instruction for the Candidate:

1. At top sheet, clearly mention Name, Univ. Roll No., Enrolment No., Paper Name & Code, Date of Exam.
2. All parts of a Question should be answered consecutively. Each Answer should start from a fresh page.
3. Assumptions made if any, should be stated clearly at the beginning of your answer.

	Section A (Answer All the Questions) (5 x 1 = 5)		
1.	Power required to drive a centrifugal pump is directly proportional to _____ of its impeller.	**Ap**	**CO3**
2.	The overshot water wheels are those in which the wheel runs entirely by the _____ of water.	**Ap**	**CO3**
3.	In a Kaplan turbine runner, the number of blades are generally between_____	**Ap**	**CO4**
4.	A Francis turbine is used when the available head of water is_____	**U**	**CO5**
5.	For centrifugal pump impeller, the maximum value of the vane exit angle is_____	**Ap**	**CO2**
	SECTION B (Attempt any **Three Questions) (3 x 5 = 15)**		
6.	Draw the Layout diagram of Hydro Power Plant and also explain the components and working of Hydro power plant? Write the purpose of Draft tube.	**U**	**CO3**
7.	Highlight the specific differences between fan, blower and air compressors?	**U**	**CO1**
8.	Explain about Gas Turbine Major Components, Modules, and Basic Systems. List the parameters to be considered for efficient operation of fan?	**Ap**	**CO2**
9.	What is a Turbomachine? Classify them on the basis of work transfer.	**Ap**	**CO4**
	SECTION C (Answer Any Two Questions) (2 x 10 = 20)		
10.	Derive Euler's turbomachine equation. Explain Principle of Similarity and Dimensional Analysis.	**Ap**	**CO4**
11.	A Pelton turbine running at 720 rpm uses 300 kg of water per second. If the head available is 425 m determine the hydraulic efficiency. The bucket deflects the jet by 65°. Also find the diameter of the runner and jet. Assume Cv = 0.97 and φ = 0.46, Blade velocity coefficient is 0.9.	**U**	**CO2**
12.	The drag coefficient of a sports car increases when the sunroof is open, and it requires more power to overcome aerodynamic drag. The additional power consumption of the car when the sunroof is opened is to be determined at two different velocities. We are to explain why some airplane wings have endplates or winglets.	**U**	**CO5**

	Agricultural Engineering	L	T	P	C
Version 1.0		3	0	0	3
Pre-requisites/Exposure					
Co-requisites					

Course Objective:

After the completion of this course students will be familiar with primary and secondary tillage and emplements, seeding, planting, harvesting, threshing, plant protection machines, equipment and there management.

Course Outcomes

On completion of this course, the students will be able to

CO1 Identify the need of farm mechanization in India.
CO2 Understand the technical knowledge and skills required for the operation, maintenance and evaluation of Tillage, Sowing and intercultural operational machinery needed for agricultural farms.
CO3 Present the need of timely harvesting of crops in India.
CO4 Integrate the technical knowledge and skills required for the operation, maintenance and evaluation of harvesting, threshing and land preparation (heavy) machinery needed for agricultural farms.
CO5 Review mathematical, experimental and computational skills for solving different field problems.
CO6 Write the various applications of agricultural engineering

Contents

Unit 1 Introduction **10 lectures**

Objectives of farm mechanization. Classification of farm machines. Materials of construction & heat treatment. Principles of operation and selection of machines used for production of crops. Field capacities & economics.

Unit 2 Tillage **10 lectures**

Tillage; primary and secondary tillage equipment. Forces acting on tillage tools. Hitching systems and controls. Draft measurement of tillage equipment : Earth moving equipment - their construction & working principles viz Bulldozer, Trencher, Elevators etc.; sowing, planting & transplanting equipment - their calibration and adjustments. Fertilizer application equipment. Weed control and Plant protection equipment - sprayers and dusters, their calibration, selection, constructional features of different components and adjustments.

Unit 3 Cutting mechanisms **6 lectures**

Principles & types of cutting mechanisms. Construction & adjustments of shear & impact-type cutting mechanisms. Crop harvesting machinery : mowers, windrowers, reapers, reaper binders and forage harvesters. Forage chopping & handling equipment.

Unit 4 Threshing **6 lectures**

Threshing mechanics & various types of threshers. Threshers, straw combines & grain combines, maize harvesting & shelling equipment, Root crop harvesting equipment - potato, groundnut etc., Cotton picking & Sugarcane harvesting equipment. Principles of fruit harvesting tools and machines. Horticultural tools and gadgets. Testing of farm machine.

Unit 5 Test codes **6**

Test codes & procedure. Interpretation of test results. Selection and management of farm machines for optimum performance.

Text Books:

1. Principle of Agricultural Engineering, Vol. I (Latest Edition) by A. M. Michael and T. P. Ojha. Jain Brothers, New Delhi, India.

References Books:

1. Principle of Farm Machinery (Latest edition) by R. A. Kepner, Roy Bainer and E. L. Barger. C & S Publishers and Distributors, New Delhi, India.
2. Farm Machinery and Equipment, 6th edition by H. P. Smith and L. H. Wilkey. Tata McGraw Hill Publishing Co. Ltd., New Delhi, India.
3. Farm Machinery, 10th edition by Clude Culpin. ELBS London, UK.
4. Elements of Farm Machines, 1st edition by A. C. Srivastava. Oxford and IBH Publishing Co. Ltd., New Delhi, India.
5. Agricultural Machines by N. I. Kelnin, I. F. Popov and A. V. A. Sakur, Amerind Publishing, New Delhi
6. Testing and Evaluation of Agricultural Machines by M. L. Mehta, S. R. Verma, S. K. Mishra and V. K. Sharma.
7. Agricultural Engineering (Through Worked Examples) by Radhey Lal and A. C. Datta. Saroj Publishers, Allahabad.

Modes of Evaluation

Components	Class Assessment	End-Term
Weightage (%)	**50**	**50**

Relationship between the Course Outcomes (COs) and Program Outcomes (POs)

Course Code	Course Name	COs	PO1	PO2	PO3	PO4	PO5	PO6	PO7	PO8	PO9	PO10	PO11	PO12	PSO1	PSO2	PSO3
	Agricultural Engineering	CO(CourseCode).1	2				1	1	1	1		1		1		3	
		CO(CourseCode).2	2				1	1	1	1		1		1		3	
		CO(CourseCode).3	2		3		1	1	1	1		1		1		3	
		CO(CourseCode).4		3	3	2	1	1	1	1		1		1		3	
		CO(CourseCode).5			3	2	1	1	1	1		1		1		3	
		CO(CourseCode).6			3	2	1	1	1	1		1		1		3	
		CO(Course Code)	2	3	3	2	1	1	1	1		1		1		3	

1=weakly mapped
2= moderately mapped
3=strongly mapped

MEE11056	Computer Integrated Manufacturing	L	T	P	C
Version 1.0		3	0	0	3
Pre-requisites/Exposure	Knowledge of basic mathematics and Applied Science, Engineering Graphics				
Co-requisites					

Course Objectives

The use of conventional machines is decreasing day by day. Evolution of information Technology, variety of manufacturing concepts with zero lead time demand and quality consciousness has supported fast adaption of Computer Aided Manufacturing.

Course Outcomes

On completion of this course, the students will be able to

1. Memorize the principle of automation
2. Summarize the working of NC and CNC machines
3. Examine the constructional features of CNC machines.
4. Deduce part programmes using ISO format for given simple components
5. Review the use of robotics, in the field of manufacturing
6. Compose a CNC programme for the manufacturing of a given component

Catalog Description

The use of conventional machines is decreasing day by day. Evolution of information Technology, variety of manufacturing concepts with zero lead time demand and quality consciousness has supported fast adaption of Computer Aided Manufacturing.

Course Content

UNITI: INTRODUCTION TO CIM & AUTOMATION 09Hrs

CIM –definition, scope and elements of CIM system-benefits, Production system facilities low-medium-high-Manufacturing support systems-Automation in production systems Automated manufacturing systems-Computerized Manufacturing Support Systems-Reasons for Automating, Automation principles and strategies-USA Principle-Ten Strategies for Automation and Production Systems, Automation –definition-Basic elements of an automated system -Levels of automation

UNITII: NC AND CNC MACHINES 08Hrs

Fundamentals of NC Technology-Basic Components of an NC System-NC Coordinate Systems-Motion Control Systems, Applications of NC-Machine Tool Applications-Other NC Applications-Advantages and Disadvantages of NC, Computer Numerical ControlFeatures of CNC-The Machine Control Unit for CNC-CNC Software, CNC ApplicationsAdvantages and Disadvantages of CNC, DNC- Direct Numerical Control-Distributed Numerical Control

UNTIII: CONSTRUCTION OF CNC MACHINES 10Hrs

Construction of CNC machines-Machine structure-Static load-Dynamic load-Thermal load, Guide ways-Friction guide ways-V guide ways-Flat &dovetail guide ways-Cylindrical guide ways-Anti frictional linear motion guide ways, Feed drives-Servomotors-Mechanical transmission system, Spindle and spindle bearings-Hydrodynamic bearings-Hydrostatic bearings-Antifriction bearings, Measuring systems- direct &

indirect measuring systems, Gauging, Tool monitoring-direct & Indirect monitoring, Automatic tool changer (ATC)Automatic pallet changer (APC)

UNITIV: CNC PART PROGRAMMING 12Hrs

Introduction to Part Programming-Coordinate system-Dimensioning-Axes & motion nomenclature Definition and importance of various positions like machine zero, home position, and work piece zero, CNC part programming-Structure of part programme-Word addressed format-Preparatory function(G)-Miscellaneous function(M)-Tool compensationSubroutines (Macros)(L)-Canned cycles-Mirror image, Simple programme on Milling and Turning operations

UNIT V: GROUP TECHNOLOGY AND CAPP 07Hrs

Group technology-Definition-Advantages and limitations of GT-Part family formationClassification and coding-Opitz coding system, Applications & benefits of GT, Cellular manufacturing-Machining cell designs-Machining cell planning, Computer aided process planning-Approaches to CAPP-Implementation techniques-Essential elements in a retrieval type CAPP system-Essential elements in a generative CAPP system, Flexible manufacturing system-Scope of FMS-FMS compared to other types of manufacturing approaches-Types of FMS-Benefits of FMS-Major elements of FMS

Text Books:

1 Automation, Production Systems, and ComputerAided Manufacturing by Mikell P. Groover Prentice-Hall International publication
2 Mechatronics HMT limited McGraw Hill Education
3 CAD/CAM Principles and Applications P N Rao McGraw Hill Education

Reference Books:

1. CNC Machines. Pabla B.S., Adithan M. New Age International, New Delhi,2014(reprint)
2. Computer Numerical Control-Turning and Machining centers. Quesada Robert Prentice Hall 2014
3. CAD/CAM. Sareen Kuldeep S.Chand 2012.

Modes of Evaluation

Components	Mid-Term	Attendance	Internal Assessment	End-Term
Weightage (%)	20	10	30	40

Relationship between the Course Outcomes (COs) and Program Outcomes (POs)

Course Code	Course Name	COs	PO1	PO2	PO3	PO4	PO5	PO6	PO7	PO8	PO9	PO10	PO11	PO12	PSO1	PSO2	PSO3
MEE 11056	Computer Integrated Manufacturing	CO(MEE 11056).1	2				1	1	1	1		1		1	3		
		CO(MEE 11056).2	2				1	1	1	1		1		1	3		
		CO(MEE 11056).3	2		3		1	1	1	1		1		1	3		
		CO(MEE 11056).4		3	3	2	1	1	1	1		1		1	3		
		CO(MEE 11056).5			3	2	1	1	1	1		1		1	3		
		CO(MEE 11056).6			3	2	1	1	1	1		1		1	3		
		CO(MEE 11056)	2	3	3	2	1	1	1	1		1		1	3		

1=weakly mapped
2= moderately mapped
3=strongly mapped

MEE11057	**Machine Tool Design**	L	T	P	C
Version 1.0		3	0	0	3
Pre-requisites/Exposure	Manufacturing Technology- II, Design of Machine Elements, Machine Drawing				
Co-requisites	--				

Course Objectives

1. To develop a solution oriented approach by in depth knowledge of Machine Tool Design.
2. To address the underlying concepts, methods and application of Machine Tool Design.
3. To develop knowledge about design consideration of advanced machine tool

Course Outcomes

On completion of this course, the students will be able to

1. Identify the kinematic structure of machine tools for producing the desired generatrix and directrix required for creating geometrical surfaces
2. Understand the knowledge of dynamics of machine tools and able to correlate this with process capability of the machine tools and design of various component.
3. Examine the various concepts involved in machine Tools and its supporting elements.
4. Explain modern control parameters required to operate machine tools more efficiently effectively.
5. Review machine tools for advanced machining and ways of meeting the same.
6. Write tool design process when designing tooling for the manufacturing of a product

Catalog Description

Implement the tool design process when designing tooling for the manufacturing of a product. Apply Geometric principles in the machining. Evaluate and select appropriate materials for tooling applications and for various kinematics application. Also develop knowledge about Structure of machine tool and various types of driving elements and components used in Machine tools as well as basic concepts of advanced machine tools design considerations.

Course Content

Module 1: Kinematic Structure of Machine Tools 8 lecture hours
Kinematic structure for producing genetratrix and directrix motions, different kinematic structures, kinematic structure of non-automatic, semi-automatic and fully automatic machine tools

Module 2: Design Principles of Speed and Feed Gear Box of Machine Tools 8 lecture hours
Speed flow diagram, ray diagram, spindle speed series, rules for lay out of speed gear box, layout of feed gear box for feed motions and cutting different thread series, determination of dimension of gears and shafts

Module 3: Design of Machine Tools Spindle, Beds, Slides and Guides 8 lecture hours
Rigidity and system compliance of machine tools, design analyses of spindle, bed, slides and guides, ball screw, roller screw, roller guides, hydrostatic lubrication of slides and guides, machine tools vibration and chatter

Module 4: Hydraulic Drives and Control of Machine Tools 8 lecture hours
Requirement of hydraulic drive and control for machine tools, selection and application of various components of basic hydraulic circuit, analyses of hydraulic circuit for constant feed motion, quick return motion, and tracer controlled copying lathe.

Module 5: Design Concept of Machine Tools for Advanced Machining 8 lecture hours

Spindle drive for high speed machining, speed drive for ultra-high spindle speed for micro machining, air bearing for ultra-precision machine tools, machine tools structure with ultra-high loop stiffness for ductile regime machining of ceramics.

Text Books

T1. Principles of Machine tools by G. C. Sen and A. Bhattacharyya, 2nd E, New Central Book Agency

T2. Machine Tools Design by S K Basu and D K Pal, 4th E, Oxford and IBH Publishing Co Pvt. Ltd

Reference Books

R1. Machine Tools Design and Numerical Control by N K Mehta, 3rdE, Tata McGraw-Hill Education Pvt. Ltd

R2. Introduction to Micromachining by V K Jain, E (2010), Narosa Publishing House

Modes of Evaluation: Quiz/Assignment/ presentation/ extempore/ Written Examination

Examination Scheme:

Components	Class Assessment	End Term
Weightage (%)	50	50

Relationship between the Course Outcomes (COs) and Program Outcomes (POs)

Course Code	Course Name	COs	PO1	PO2	PO3	PO4	PO5	PO6	PO7	PO8	PO9	PO10	PO11	PO12	PSO1	PSO2	PSO3
MEE1 1018	Machine Tool Design	CO(MEE1 1018).1	2				1	1	1	1		1		1	3		
		CO(MEE1 1018).2	2				1	1	1	1		1		1	3		
		CO(MEE1 1018).3	2		3		1	1	1	1		1		1	3		
		CO(MEE1 1018).4		3	3	2	1	1	1	1		1		1	3		
		CO(MEE1 1018).5			3	2	1	1	1	1		1		1	3		
		CO(MEE1 1018).6			3	2	1	1	1	1		1		1	3		
		CO(MEE1 1018)	2	3	3	2	1	1	1	1		1		1	3		

1=weakly mapped,

2= moderately mapped,

3=strongly mapped

Model Question Paper

ADAMAS UNIVERSITY
SCHOOL OF ENGINEERING AND TECHNOLOGY

END-SEMESTER EXAMINATION:

Name of the Program: B. Tech Semester: Stream: ME
PAPER TITLE: Machine Tool Design
PAPER CODE: MEE11057
Maximum Marks: 40 Time duration: 3 hours
Total No of questions: 12 Total No of Pages: 01

Instruction for the Candidate:

1. At top sheet, clearly mention Name, Univ. Roll No., Enrolment No., Paper Name & Code, Date of Exam.
2. All parts of a Question should be answered consecutively. Each Answer should start from a fresh page.
3. Assumptions made if any, should be stated clearly at the beginning of your answer.

	Section A (Answer All the Questions) (5 x 1 = 5)		
1.	Why ultra-high spindle speed is necessary for micro machining	**R**	**CO5**
2.	What is the importance of ray-diagram in gear box design?	**R**	**CO1**
3.	What are the factors affecting the stiffness of machine tool structures?	**R**	**CO2**
4.	Explain the weight comparison of CI and steel structure	**U**	**CO3**
5.	How rigidity is calculated in spindle design	**U**	**CO2**
	SECTION B (Attempt any **Three Questions) (3 x 5 = 15)**		
6.	Discuss the methods of improving stiffness of machine tool structures?	**R**	**CO3**
7.	A six speed gear box is to be designed for transmitting 8 H.P with speed ranging from 600 rpm with common ratio as 1.25. Select the optimum ray diagram and hence calculate the gear sizes. Calculate the shaft sizes and sketch the gear box?	**Ap**	**CO3**
8.	Design the headstock of a lathe having nine spindle speeds ranging from 50rpm. The machine capacity is 6KW, with common ratio as 1.5. Show the layout of gearbox and connection to the motor?	**R**	**CO2**
9.	Discuss bearing characteristic number and bearing modulus as applied to journal bearing?	**U**	**CO3**
	SECTION C (Answer Any Two Questions) (2 x 10 = 20)		
10.	A 35 KW motor running at 1500 rpm drives a compressor at 720 rpm through 60º bevel gearing arrangement. The pinion has 24 teeth. The gear material can be taken as cast steel. Face width can be taken as 1/4 of the slant height of pitch cone. Design the gear pair for 20º stub teeth system?	**Ap**	**CO4**
11.	a) Explain design features and types of machine tool beds with neat sketches? b) What are the methods to lower thermal stresses in machine tools? Explain with examples?	**U**	**CO3**
12.	A pair of helical gears 23º helix angle is used to transmit 25 KW at 3000 rpm from the pinion shaft with a velocity ratio of 3:1.The static strength of the gear material can be taken as 75N/mm2. Number of teeth on the pinion is 24.Find the module pitch, face width and axial thrust developed on the shaft for 20º full depth involute teeth and check the design against static strength considerations?	**Ap**	**CO4**

MEE11058	**Power Plant Engineering**	L	T	P	C
Version 1.0		3	0	0	3
Pre-requisites/Exposure	Engineering Thermodynamics, Applied Thermodynamics				
Co-requisites	--				

Course Objectives:

1. To be able to explain the various types of power plants and sources of power generation.
2. To calculate load factor, capacity factor, average load and peak load on a power plant.
3. To be able to select the suitability of site for a power plant and calculate performance of thermal power plant.
4. To explain working principle of different types of nuclear power plant.

Course Outcomes:

On completion of this course, the students will be able to

1. Outline economic scenario of power generation sectors
2. Estimate the efficiency, steam generation rate, turbine work etc. of a steam turbine plant and understand the mechanisms of modification of getting maximum efficiency.
3. Examine the input and output parameters associated with Diesel And Gas Turbine Power Plants.
4. Explain the working principles of nuclear power plant.
5. Review the idea of environmental and safety aspects of power plant operation.
6. Collaborate with a power plant to know the knowledge of the subject

Catalogue Description:

This Course provides a simple understanding of the power plant engineering. The economics of power generation and the environmental aspect of power generation are discussed elaborately in this course.The course deals with the details of steam and gas thermal power plants, hydro power plants, nuclear power plants, along with solar, wind and geothermal energy power systems in addition to the direct energy conversion.

Course Content

Module 1: 7 Lecture Hours

Economics of Power Generation

Power tariff types, Load distribution parameters, load curve, Comparison of site selection criteria, relative merits & demerits, Capital & Operating Cost of different power plants.

Module 2 10 Lecture Hours

Thermal Power Plant

Rankine cycle - improvisations, Layout of modern coal power plant, Super Critical Boilers, FBC Boilers, Turbines, Condensers, Steam & Heat rate, Subsystems of thermal power plants – Fuel and ash handling, Draught system, Feed water treatment. Binary Cycles and Cogeneration systems.

Module 3: 8 Lecture Hours

Diesel and Gas Turbine Power Plants

Otto, Diesel, Dual &Brayton Cycle - Analysis & Optimisation. Components of Diesel and Gas Turbine power plants. Combined Cycle Power Plants.

Module4: 7 Lecture Hours

Nuclear Power Plant

Basics of Nuclear Engineering, Layout and subsystems of Nuclear Power Plants, Working of Nuclear Reactors: Boiling Water Reactor (BWR), Pressurized Water Reactor (PWR), CANada Deuterium- Uranium reactor (CANDU), Breeder, Gas Cooled and Liquid Metal Cooled Reactors. Safety measures for Nuclear Power plants.

Module 5: 8 Lecture Hours

Non-conventional Power Generation

Environmental Impacts of Burning of Fossil fuels; Sustainable Development and Role of Renewable Energy Sources. Hydro Electric Power Plants – Classification, Typical Layout and associated components including Turbines.

Modes of Evaluation: Quiz/Assignment/ presentation/ extempore/ Written Examination
Examination Scheme:

Components	Class Assessment	End Term
Weightage (%)	50	50

Relationship between the Course Outcomes (COs) and Program Outcomes (POs)

Course Code	Course Name	COs	PO1	PO2	PO3	PO4	PO5	PO6	PO7	PO8	PO9	PO10	PO11	PO12	PSO1	PSO2	PSO3
MEE1 1048	Power Plant Engineering	CO(MEE1 1048).1	2				1	1	1	1		1		1			3
		CO(MEE1 1048).2	2				1	1	1	1		1		1			3
		CO(MEE1 1048).3	2		3		1	1	1	1		1		1			3
		CO(MEE1 1048).4		3	3	2	1	1	1	1		1		1			3
		CO(MEE1 1048).5			3	2	1	1	1	1		1		1			3
		CO(MEE1 1048).6			3	2	1	1	1	1		1		1			3
		CO(MEE1 1048)	2	3	3	2	1	1	1	1		1		1			3

1=weakly mapped,
2= moderately mapped,
3=strongly mapped

	Additive Manufacturing	L	T	P	C
Version 1.0		3	0	0	3
Pre-requisites/Exposure	Engineering Mechanics, Manufacturing Technology				
Co-requisites					

Course Objectives:

1. To introduce the fundamentals and significance of Additive Manufacturing (AM).
2. To explore various AM processes and their applications in engineering.
3. To understand materials used in AM and their properties.
4. To analyze the design considerations and post-processing techniques in AM.
5. To learn about recent advancements and industrial applications of AM.

Course Outcomes

Upon successful completion of the course, students will be able to:

CO1. Understand the principles, advantages, and challenges of Additive Manufacturing.
CO2. Apply knowledge of AM processes to select suitable methods for specific applications.
CO3. Analyze material properties and select appropriate materials for AM.
CO4. Incorporate design principles specific to AM into product development.
CO5. Explore advanced AM technologies and their potential industrial applications.
CO6. Write a comprehensive report on various additive manufacturing processes.

Catalog Description

Additive Manufacturing (AM), also known as 3D Printing, is revolutionizing traditional manufacturing processes by enabling the creation of complex, lightweight, and customized components. This course provides a comprehensive understanding of the principles, processes, materials, and applications of AM. Students will explore advanced manufacturing methods, design considerations, and the integration of AM into various industries. This syllabus is designed to provide a comprehensive understanding of Additive Manufacturing, equipping students with the knowledge and skills to pursue research or careers in advanced manufacturing fields.

Contents

Module 1: Introduction to Additive Manufacturing [8 Hours]

- **Overview of Additive Manufacturing:** History, evolution, and significance.
- **Comparison with Traditional Manufacturing:** Advantages, limitations, and challenges.
- **AM Process Chain:** Concept to final product – CAD, STL, and slicing.
- **AM Technologies Overview:** Classification based on energy source and material used.

Module 2: Additive Manufacturing Processes [8 Hours]

- **Material Extrusion:** Fused Deposition Modeling (FDM) – principles, applications, and limitations.
- **Vat Photopolymerization:** Stereolithography (SLA) and Digital Light Processing (DLP).
- **Powder Bed Fusion:** Selective Laser Sintering (SLS) and Electron Beam Melting (EBM).
- **Material Jetting and Binder Jetting:** Techniques and applications.

- **Direct Energy Deposition (DED):** Laser-based DED and Wire-Arc AM.

Module 3: Materials for Additive Manufacturing [8 Hours]

- **Polymers:** Properties, applications, and processing challenges.
- **Metals:** Steel, titanium, aluminum alloys, and superalloys.
- **Ceramics:** AM applications in biomedical and aerospace sectors.

Module 4: Design for Additive Manufacturing (DfAM) [8 Hours]

- **Design Considerations:** Freedom of design, part orientation, and support structures.
- **Topology Optimization:** Lightweighting and stress analysis for AM parts.
- **CAD Modifications for AM:** Integrating AM capabilities into design software.
- **Post-Processing Techniques:** Surface finishing, heat treatment, and assembly.
- **Testing and Validation:** Quality assurance and certification processes.

Module 5: Advanced Topics and Industrial Applications [8 Hours]

- **Multi-Material AM:** Hybrid manufacturing and gradient materials.
- **Additive Manufacturing of Smart Materials:** Shape-memory alloys and 4D printing.
- **Industrial Use Cases:** Real-world examples from aerospace, medical implants, and tooling.

Textbooks

1. Ian Gibson, David W. Rosen, and Brent Stucker, "Additive Manufacturing Technologies: 3D Printing, Rapid Prototyping, and Direct Digital Manufacturing," Springer.
2. Andreas Gebhardt, "Understanding Additive Manufacturing: Rapid Prototyping - Rapid Tooling - Rapid Manufacturing," Hanser Publishers.

Reference books

1. Amit Bandyopadhyay and Susmita Bose, "Additive Manufacturing," CRC Press.
2. ASTM Standards for Additive Manufacturing Processes.
3. Journal Articles and Case Studies in Additive Manufacturing.

Modes of Evaluation: Quiz/Assignment/ presentation/ extempore/ Written Examination

Examination Scheme:

Components	**Internal assessment**	**End Term Examination**
Weightage (%)	50	50

Relationship between the Course Outcomes (COs), Program Outcomes (POs)& PSOs

Course Code	Course Name	COs	PO1	PO2	PO3	PO4	PO5	PO6	PO7	PO8	PO9	PO10	PO11	PO12	PSO1	PSO2	PSO3
	Additive Manufacturing	CO(Course Code).1	2				1	1	1	1		1		1	3		
		CO(Course Code).2	2				1	1	1	1		1		1	3		
		CO(Course Code).3	2		3		1	1	1	1		1		1	3		
		CO(Course Code).4		3	3	2	1	1	1	1		1		1	3		
		CO(Course Code).5			3	2	1	1	1	1		1		1	3		
		CO(Course Code).6			3	2	1	1	1	1		1		1	3		
		CO(Course Code)	2	3	3	2	1	1	1	1		1		1	3		

1=weakly mapped
2= moderately mapped
3=strongly mapped

MEE11065	Smart Materials	L	T	P	C
Version 1.0		3	0	0	3
Pre-requisites/Exposure	Materials Engineering				
Co-requisites					

Course Objectives:

1. To understand the concept of smart materials and smart structures
2. To develop familiarity with piezoelectric materials and their use as sensors and actuators in various configurations
4. To obtain knowledge of various other smart materials/structures with application examples
5. To read and understand emerging technical literature about the subject

Course Outcomes:

On completion of this course, the students will be able to

1. Tabulate the characteristics of materials such as Metals, Polymers and Ceramics.
2. Categorize materials for sensor applications based on required properties.
3. Determine the properties of shape memory alloys with other class of materials and propose its suitability for a range of applications.
4. Analyze the properties of smart structures, MEMS, with the applications and select suitable procedure for fabrication.
5. Review the methods and uses of Micro fabrications, Biomimetics, types of polymers used in MEMS, Fibre optics, piezoelectric sensing and actuation.
6. Write a detailed report on applications of smart materials

Catalogue Description:

Smart Structures and Intelligent System are becoming an integral part of new aerospace and automobile systems due to high performance and fast response potential. Knowledge in this field is multi-disciplinary in nature involving materials, composites, basic electronics, control system and informatics. In different applications, materials experience a variety of environment like heat, stress, moisture, chemicals, radiation, etc, and thus it is imperative to study the behaviour of a material when exposed to these environments. Students will be expected to develop a basic understanding of different types of smart materials and systems materials along with their structures and properties.

Course Content

Module 1: 8 lecture hours

Introduction to Smart Materials

Characteristics of composites and ceramics materials, Dynamics and controls, concepts, Electro-magnetic materials and shape memory alloys-processing and characteristics. Applications of Smart structures.

Module 2: 8 lecture hours

Sensing and Actuation

Principles of electromagnetic, acoustics, chemical and mechanical sensing and actuation, Types of sensors and their applications, their compatibility writer conventional and advanced materials, signal processing, principles and characterization.

Module 3: 8 lecture hours

Design principle of smart Materials

Design of shape memory alloys, Types of MR fluids, Characteristics and application, principles of MR fluid value designs, Magnetic circuit design, MR Dampers, Design issues.

Optics: Principles of optical fibre technology.

Module 4: 8 lecture hours

Control design

Principles of drag and turbulence control through smart skins, applications in environment such as aerospace and transportation vehicles, manufacturing, repair and maintainability aspects. Principles of structural acoustic control, distributed, analog and digital feedback controls, Dimensional implications for structural control.

Module 5: 8 lecture hours

Information Processing

PZT Actuators, MEMS, Magnetic shape Memory Alloys, Characteristics and Applications. Neural Network, Data Processing, Data Visualization and Reliability.

Text Books

1. "Smart Materials and Structures", M.V. Gandhi and B.S. Thompson, Springer Chapmen & Hall publishing company, 1st Edition, 1992.

2. "Smart Structures –Analysis and Design", A.V.Srinivasan and D Michel, Cambridge University Press, 2nd Edition, 2001.

Reference Books

1. "Smart Materials" Mel Schwartz, CRC Press, 1st Edition, 2009.
2. "Smart Material and New Technologies" Michelle Addington and Daniel Schodek, Elsevier-Architectural Press, 1st edition, 2005.
3. "Smart Materials and Structures: New Research", Peter L. Reece, Nova Science Publisher, 1st Edition, 2007.
4. "Materials that Change Color: Smart Materials, Intelligent Design", Marinella Ferrara and Murat Bengisu, Springer, 1st Edition, 2014.

Modes of Evaluation: Quiz/Assignment/ presentation/ extempore/ Written Examination

Examination Scheme:

Components	Class Assessment	End Term
Weightage (%)	50	50

Relationship between the Course Outcomes (COs) and Program Outcomes (POs)

Course Code	Course Name	COs	PO1	PO2	PO3	PO4	PO5	PO6	PO7	PO8	PO9	PO10	PO11	PO12	PSO1	PSO2	PSO3
MEE11038	Smart materials	CO(MEE11038).1	2				1	1	1	1		1		1		3	
		CO(MEE11038).2	2				1	1	1	1		1		1		3	
		CO(MEE11038).3	2		3		1	1	1	1		1		1		3	
		CO(MEE11038).4		3	3	2	1	1	1	1		1		1		3	
		CO(MEE11038).5			3	2	1	1	1	1		1		1		3	
		CO(MEE11038).6			3	2	1	1	1	1		1		1		3	
		CO(MEE11038)	2	3	3	2	1	1	1	1		1		1		3	

1=weakly mapped
2= moderately mapped
3=strongly mapped

MEE12034	Heat Transfer Lab	L	T	P	C
Version 1.0		0	0	2	1
Pre-requisites/Exposure	Engineering Thermodynamics, Heat Transfer				
Co-requisites	--				

Course Objectives:

1. This course aims to provide a good platform to mechanical engineering students to understand, model and appreciate concept of dynamics involved in thermal energy transformation.
2. To prepare them to carry out experimental investigation and analysis at later stages of graduation.

Course Outcomes:

After successful completion of the course, the students will be able to:

1. Identify the application of mathematics, science and engineering fundamentals to model the energy conversion phenomenon.
2. Understand power production based on the fundamental laws of thermal engineering.
3. Determine the effectiveness of energy conversion process in mechanical power generation for the benefit of mankind.
4. Explain concepts learnt in fundamentals laws of thermodynamics from which learning ideas how to sustain in energy crisis and think beyond curriculum in the field of alternative and renewable sources of energy.
5. Review the concepts of heat exchangers and try to think beyond curriculum in alternative sources of energy.
6. Compose the various experiments related to heat transfer lab

Catalogue Description:

Applied Thermodynamics & Heat Transfer laboratory provides fundamental and industrial knowledge about modes of heat transfer, like conduction, convection and radiation, and their application. Heat Transfer Lab consists of the following equipments. Pin Fin Apparatus: This setup is designed to study the heat transfer in a pin fin. It consists of cylindrical fin fitted to the base in rectangular duct. A blower is provided on one side of duct to conduct experiments under forced convection heat transfer mode. Five thermocouples are embedded along the axis of the cylindrical fin at five different locations and one thermocouple placed in the air stream at the exit of the test section to measure the outlet air temperature. Digital Temperature Indicator is provided to read temperatures distribution along the fin. Test pipe is connected to the delivery side of the blower along with the Orifice to measure flow of air through the pipe. A heater heats one end of fin and heat flows to another end. Heat input to the heater is given through variac. Students will be expected to develop the following skills/understanding upon the successful completion of this experiment.

Course Content

List of Experiments (Any ten)	
1	To determine dryness fraction of steam by using separating throttling calorimeter

2	To determine the mechanical efficiency of a four stroke single cylinder diesel engine
3	To calculate the opening and closing time of the inlet valve and the exhaust valve of an I.C. Engine and draw a valve timing diagram
4	To study the constructional details of different fire tube and water tube boilers
5	To determine the Thermal conductivity of insulating powder
6	To determine the Thermal conductivity of a metal bar
7	To determine the effectiveness and rate of heat transfer of pin fin for Natural convection mode
8	To determine the effectiveness and rate of heat transfer of pin fin for Forced convection mode
9	To study Radiation heat transfer using the Stefan Boltzmann apparatus and determine the emissivity of a given gray body
10	To study the transfer of energy between two fluids for parallel flow of concentric tube heat exchanger
11	To study the transfer of energy between two fluids for counter flow of concentric tube heat exchanger

Reference Books

1. Incropera, F.P. and Dewitt, D.P., Fundamentals of Heat and Mass Transfer, 5th ed., John Wiley, 2002.
2. Holman, J.P., Heat Transfer, 9 th ed., Tata McGraw-Hill, 2004.
3. Ozisik, M.N., Heat Transfer - A Basic Approach, McGraw-Hill, 1985.
4. Cengel, Y.A., Heat Transfer - A Practical Approach, McGraw-Hill, 1998.

Modes of Evaluation: Quiz/Assignment/ presentation/ extempore/ Written Examination
Examination Scheme:

Components	Class Assessment	End-Term
Weightage (%)	50	50

Relationship between the Course Outcomes (COs) and Program Outcomes (POs)

Course Code	Course Name	COs	PO1	PO2	PO3	PO4	PO5	PO6	PO7	PO8	PO9	PO10	PO11	PO12	PSO1	PSO2	PSO3
MEE12034	Heat Transfer Lab	CO(MEE12034).1	2				1	1	1	1		1		1			3
		CO(MEE12034).2	2				1	1	1	1		1		1			3
		CO(MEE12034).3	2		3		1	1	1	1		1		1			3
		CO(MEE12034).4		3	3	2	1	1	1	1		1		1			3
		CO(MEE12034).5			3	2	1	1	1	1		1		1			3
		CO(MEE12034).6			3	2	1	1	1	1		1		1			3
		CO(MEE12034)	2	3	3	2	1	1	1	1		1		1			3

1=weakly mapped,
2= moderately mapped,
3=strongly mapped

Name: **Enrolment No:**	

Course: MEE12034 – Heat Transfer Lab

Program: B.Tech. **Semester: VII**

Time: 03 hrs. **Max. Marks: 40**

Instructions:

Attempt the Questions from (Carrying 40 Marks)

(Answer the Questions) (40 x 1 = 40)

Sl. No.	Laboratory Questions	Knowledge Level
1	**Draw** the heat balance sheet from the data given below which boiler generating 500 kg/hr of steam at 10.5 bar pressure and 0.97 dryness fraction. Fuel used and its calorific value : 75kg/hr and 31500KJ/kg Moisture present in the fuel : 6% by mass ; Mass of dry flue gases : 10kg/kg of fuel Temp. of flue gases : 315°C Specific heat of flue gases : 1.1 KJ/kgK Temperature of boiler room : 38°C Feed water temperature : 50°C	**Evaluate**
2	**Draw** the Actual valve timing diagram of 4- stroke petrol engine	**Evaluate**
3	**Determine** the Calorific Value of Fuels by using different calorimeters	**U**
4	**Determine** the of Dryness fraction by using different Calorimeters.	**Apply**
5	**Determine** average heat transfer coefficient for a externally heated horizontal pipe under forced convection & plot Reynolds and Nusselt numbers along the length of pipe. Also compare the results with those of the correlations.	**Apply**
6	**Determine** the water side overall heat transfer coefficient on a cross-flow heat exchanger	**Evaluate**

MEE12012	Fluid Mechanics & Hydraulics Lab	L	T	P	C
Version 1.0		0	0	2	1
Pre-requisites/Exposure	Fluid Mechanics, Hydraulic Machine				
Co-requisites	--				

Course Objectives

1. To provide practical knowledge in verification of principles of fluid flow.
2. To impart knowledge in measuring pressure, discharge and velocity of fluid flow.
3. To understand major and minor losses.
4. To gain knowledge in performance testing of Hydraulic Turbines and Hydraulic Pumps at constant speed and head

Course Outcomes

On completion of this course, the students will be able to

CO1. Find the effect of fluid properties on a flow system.

CO2. Understand the flow measurement with the help of flow measuring devices such as Venturi meter, Orifice meter and V-notch.

CO3. Experiment on various types of fluid flow patterns.

CO4. Calculate the friction factor in a major head loss of pipe flow.

CO5. Detect various types of head losses in the pipe flow.

CO6. Devise the application of the Bernoulli's theorem.

Catalog Description

The aim of this course is to introduce basic principles of fluid mechanics and it is further extended to cover the application of fluid mechanics by the inclusion of fluid machinery. Now a days the principles of fluid mechanics find wide applications in many situations like venturi meter, orifice meter, V-notch and Head losses in pipe flow etc. The course deals with the fluid machinery, like Turbines, Pumps in general and in power stations. This course also deals with the large variety of fluids such as air, water, steam etc. However, the major emphasis is given for the study of water.

Course Content

List of Experiments (Any ten)

1. To determine coefficient of discharge of fluid through Orifice meter
2. To determine coefficient of discharge of fluid through Venturimeter.
3. To determine the coefficient of discharge of fluid through Notch (V-types).
4. To determine the coefficient of contraction & velocity of fluid through Orifice.
5. To verify Bernoulli's Theorem (Law of Conservation of Energy) and also to plot the graph of piezo-metric head, kinetic head and total head vs. points along the pipe line.
6. To calibrate the given V-notch, Trapezoidal and Rectangular notches by establishing the relationship between the flow rate and the head over notches.
7. To determine the frictional head losses in pipe flow.
8. To determine the Co-efficient of friction in flow through pipes of various sizes.
9. To illustrate laminar and turbulent flows and to determine the Reynolds number under which types of flows occurs.

10. To determine the viscosity of given sample oil by Redwood Viscometer.
11. To study centrifugal pump and to find out the efficiency and performance characteristics of centrifugal pump.
12. To study the performance parameters of two centrifugal pumps in parallel connection.
13. To study the performance of reciprocating pump.
14. To study the performance of Pelton turbine.
15. To study the efficiency of Francis turbine.

Text Books

1. A Textbook of Fluid Mechanics and Hydraulic Machines, Dr. R.K. Bansal, Laxmi Publications Pvt. Ltd.,5th Edition
2. Fluid Mechanics and Fluid Machines, S K Som & G Biswas, Tata McGraw Hill Greenbaum. Sidney. College Grammar of English. Longman Publishers. ISBN: 9780582285972.

Reference Books

1. Fluid Mechanics, V.L.Streeter, McGraw Hill Book Co., (2001)
2. Introduction to Fluid Mechanics, Fox & Macdonald, Wiley
3. Fluid Mechanics, Hydraulics and Fluid machines, S Ramamrutham, Dhanpat Rai.

Modes of Evaluation: Quiz/Assignment/ presentation/ extempore/ Written Examination
Examination Scheme:

Components	Class Assessment	End Term
Weightage (%)	50	50

Relationship between the Course Outcomes (COs) and Program Outcomes (POs)

Course Code	Course Name	COs	PO1	PO2	PO3	PO4	PO5	PO6	PO7	PO8	PO9	PO10	PO11	PO12	PSO1	PSO2	PSO3
MEE12012	Fluid mechanics & Hydraulics Lab	CO(MEE12012).1	2				1	1	1	1		1		1			3
		CO(MEE12012).2	2				1	1	1	1		1		1			3
		CO(MEE12012).3	2		3		1	1	1	1		1		1			3
		CO(MEE12012).4		3	3	2	1	1	1	1		1		1			3
		CO(MEE12012).5			3	2	1	1	1	1		1		1			3
		CO(MEE12012).6			3	2	1	1	1	1		1		1			3
		CO(MEE12012)	2	3	3	2	1	1	1	1		1		1			3

1=weakly mapped
2= moderately mapped
3=strongly mapped

ADAMAS UNIVERSITY
SCHOOL OF ENGINEERING AND TECHNOLOGY
END-SEMESTER EXAMINATION: JULY 2020

Name of the Program: B.Tech — Semester: IV
Stream: ME
PAPER TITLE: FLUID MECHANICS & HYDRAULIC MACHINERY LAB
PAPER CODE: MEE12012
Maximum Marks: 40 — Time duration: 3 hours
Total No of questions: 12 — Total No of Pages: 01

Instruction for the Candidate:

1. At top sheet, clearly mention Name, Univ. Roll No., Enrolment No., Paper Name & Code, Date of Exam.
2. All parts of a Question should be answered consecutively. Each Answer should start from a fresh page.
3. Assumptions made if any, should be stated clearly at the beginning of your answer.

	Section A (Answer All the Questions) (5 x 1 = 5)		
1.	What is the dimension of Kinematic Viscosity? (In terms of MLT)	**U**	**CO1**
2.	What is the relation between the C_d, C_c and C_v?	**U**	**CO2**
3.	What is the Function of Draft Tube in Reaction Turbine?	**R**	**CO7**
4.	Describe the main difference between the Impulse and Reaction Turbine	**R**	**CO7**
5.	Explain the Bernoulli's Theorem.	**U**	**CO6**
	SECTION B (Attempt any **Three Questions) (3 x 5 = 15)**		
6.	To determine coefficient of discharge of fluid through Venturi meter.	**U**	**CO2**
7.	To verify Bernoulli's Theorem (Law of Conservation of Energy) and also to plot the graph of piezo-metric head, kinetic head and total head vs. points along the pipe line.	**Ap**	**CO6**
8.	To Determine the Efficiency of Pelton turbine.	**Ap**	**CO7**
9.	To Determine the Efficiency of Francis turbine.	**Ap**	**CO7**
	SECTION (Answer Any Two Questions) (2 x 10 = 20)		
10.	To illustrate laminar and turbulent flows and to determine the Reynolds number under which types of flows occurs.	**U**	**CO3**
11.	To find out the efficiency and performance characteristics of centrifugal pump.	**Ap**	**CO5**

MEE12023	Manufacturing Technology-II Lab	L	T	P	C
Version 1.0		0	0	2	1
Pre-requisites/Exposure	Manufacturing Technology-I				
Co-requisites	--				

Course Objectives

1. The course provides students with fundamental knowledge and principles in material removal processes.
2. In this course, the students apply the fundamentals and principles of metal cutting to practical applications through multiple labs using lathes, milling machines, grinding machines, and drill presses, Computer Numerical Control etc.
3. To demonstrate the fundamentals of machining processes and machine tools.
4. To develop knowledge and importance of metal cutting parameters.
5. To develop fundamental knowledge on tool materials, cutting fluids and tool wear mechanisms.
6.To apply knowledge of basic mathematics to calculate the machining parameters for different machining processes.

Course Outcomes

On completion of this course, the students will be able to

CO1. Outline the Speed Structure of an All Geared Head Stock Lathe and Calibration of Rotational Speed of Lathe Spindle.

CO2. Understand the Speed Structure of Step Pulley Head Stock Drive of the Lathe with Back Gear and Calibration of Lathe Spindle Speed.

CO3. Examine the Apron Mechanism of a Lathe and Calibration of Longitudinal Feed and Determination of Apron Constant.

CO4. Explain the various ways of Multi-Start Cylindrical Thread Cutting in a Centre Lathe.

CO5. Test the various ways of Multi-Start Taper Thread Cutting in a Centre Lathe Using Taper Turning Attachment.

CO6. Simulate the chip formation mechanism and calculate the various parameter associated with it.

Catalogue Description

Study of fundamentals of Manufacturing Process and hence educate the students about the scope of the subject. To train the students in the metal cutting domain so as to equip them with adequate knowledge about the various processes like turning, shaping, planning, drilling, milling and grinding. To emphasize upon the prominent theories, concepts and constructional features, machining time, applications of machine tools related to them. To provide an insight about the cutting tool geometry, cutting tool material, tool life, formation of chips, requirements of cutting fluid. To lay groundwork for further studies in manufacturing stream. Theoretical teaching is accompanied by practical examples, case studies and laboratory demonstrations.

Course Content

List of Experiments (Any ten)	
1.	Study of Speed Structure of an All Geared Head Stock Lathe and Calibration of Rotational Speed of Lathe Spindle.
2.	Study of Speed Structure of Step Pulley Head Stock Drive of the Lathe with Back Gear and Calibration of Lathe Spindle Speed.
3.	Study of Apron Mechanism of a Lathe and Calibration of Longitudinal Feed and Determination of Apron Constant.
4.	Study of Multi-Start Cylindrical Thread Cutting in a Centre Lathe.
5.	Study of Multi-Start Taper Thread Cutting in a Centre Lathe Using Taper Turning Attachment.
6.	Study of Forms of Chips and Chip Reduction Coefficient in Pure Orthogonal Cutting during Longitudinal Turning.

7.	Study of Chip Reduction Coefficient in Pure Orthogonal Cutting during Shaping.
8.	Study of Machining of Straight Tooth Spur Gear in Horizontal Arbor Milling Machine by Forming with Simple Indexing.
9.	Study of Machining of Straight Tooth Spur Gear in Horizontal Arbor Milling Machine by Forming with Differential Indexing.
10.	Study of Machining of Helical Tooth Spur Gear (Right hand or Left hand) in a Horizontal Arbor Milling Machine by Forming.
11.	Study of Machining of Straight Tooth Rack in Horizontal Arbor Milling Machine by Forming.
12.	Study of Straight Tooth Spur Gear Cutting by Generation in Gear Hobbing Machine.
13.	Study of Helical Tooth Spur Gear Cutting by Generation in Gear Hobbing Machine.
14.	Determination Cutting Forces during Longitudinal Turning.
15.	Determination of Cutting Temperature in Longitudinal Turning.
16.	Study of Surface Roughness Obtained During Longitudinal Turning.
17.	Study of Horizontal Spindle Surface Grinder and its Operation.
18.	Study of a Cylindrical Grinder and its Operation.

Text Books

1. Machining and Machine Tools, A. B. Chattopadhyay, Wiley-India
2. Principles of Machine Tools, G. C. Sen and A. Bhattacharyya, New Central Book Agency

Reference Books

1. Fundamentals of Machining and Machine Tools, G. Boothroyd and W. A. Night, CRC Press
2. Metal Cutting Theory and Practice, A. Bhattacharyya, New Central Book Agency

Modes of Evaluation: Quiz/Assignment/ presentation/ extempore/ Written Examination

Examination Scheme:

Components	Class Assessment	End-Term
Weightage (%)	50	50

Relationship between the Course Outcomes (COs) and Program Outcomes (POs)

Course Code	Course Name	COs	PO1	PO2	PO3	PO4	PO5	PO6	PO7	PO8	PO9	PO10	PO11	PO12	PSO1	PSO2	PSO3
MEE12023	Manufacturing Technology - II Lab	CO(MEE12023).1	2				1	1	1	1		1		1	3		
		CO(MEE12023).2	2				1	1	1	1		1		1	3		
		CO(MEE12023).3	2		3		1	1	1	1		1		1	3		
		CO(MEE12023).4		3	3	2	1	1	1	1		1		1	3		
		CO(MEE12023).5			3	2	1	1	1	1		1		1	3		
		CO(MEE12023).6			3	2	1	1	1	1		1		1	3		
		CO(MEE12023)	2	3	3	2	1	1	1	1		1		1	3		

Name: **Enrolment No:**	

Course: Manufacturing Technology-II Lab (MEE12023)

Program: B.Tech. **Semester:**

Time: 03 hrs. **Max. Marks: 40**

Instructions:

Attempt the Questions from (Carrying 40 Marks)

(Answer the Questions) (40 x 1 = 40)

Sl. No.	Laboratory Questions	**Knowledge Level**
1	Produce a Multi-Start Cylindrical Thread Cutting in a Centre Lathe.	**Apply**
2	Determine chip Reduction Coefficient in Pure Orthogonal Cutting during Longitudinal Turning.	**Evaluate**
3	Produce straight Tooth Spur Gear in Horizontal Arbor Milling Machine by Forming with Differential Indexing.	**Apply**
4	Determine surface Roughness During Longitudinal Turning.	**Apply**

MEE15062	Technical Seminar

	Automatic Controls	L	T	P	C
Version 1.0		3	1	0	4
Pre-requisites/Exposure					

Course Objectives

1. To teach the fundamental concepts of Control systems and mathematical modeling of the system
2. To study the concept of time response and frequency response of the system
3. To teach the basics of stability analysis of the system

Course Outcomes

On completion of this course, the students will be able to

CO1. Select the mathematical model for mechanical and electrical systems.
CO2. Predict the steady state and transient response of different types of systems.
CO3. Examine the stability of the mechanical and electrical systems.
CO4. Categorize the linear controllers for mechanical and electrical systems.
CO5. Review the working of different types of controllers
CO6. Build a suitable controller for the given application

Catalog Description

This course introduces the design of feedback control systems as applied to a variety of air and spacecraft systems. Topics include the properties and advantages of feedback systems, time-domain and frequency-domain performance measures, stability and degree of stability, the Root locus method, Nyquist criterion, frequency-domain design, and state space methods.

Course Content

Unit I: MODELING OF SYSTEMS: 15 lecture hours

Introduction to Control Systems, Types of control systems, Effect of feedback systems, Differential equations of physical systems – Mechanical systems- Friction, Translational systems, Mechanical accelerometer, Levered systems , Rotational systems, Gear trains, Electrical systems, Analogous systems, Transfer functions, Block diagrams, Signal Flow graphs

Unit II: TIME RESPONSE OF FEEDBACK CONTROL SYSTEMS 8 lecture hours

Standard test signals, Unit step response of First and second order systems, Time response specifications, Time response specifications of second order systems, steady – state errors and error constants.

.

Unit III: STABILITY ANALYSIS: 12 lecture hours

Concepts of stability, Necessary conditions for Stability, Routh-Hurwitz stability criterion, Relative stability analysis; Special cases of RH criterion**,** Introduction, basic properties of root loci, Construction of root loci

Unit IV: FREQUENCY DOMAIN ANALYSIS 10 Lecture hours

Introduction, Mathematical preliminaries, Nyquist Stability criterion, Assessment of relative stability using Nyquist criterion, Correlation between time and frequency response, Bode plots, All pass and minimum phase systems, Experimental determination of transfer functions, Assessment of relative stability using Bode Plots

Unit V: INTRODUCTION TO STATE VARIABLE ANALYSIS 3 Lecture Hours

Concepts of state, state variable and state models, Solution of state equations

Text Books

1. K. Ogata, "Modern Control Engineering" Prentice Hall of India.
2. B.C. Kuo, "Automatic Control systems." Wiley India Ltd.

Reference Books

1. D. Roy Choudhary, "Modern Control Engineering" Prentice Hall of India.
2. M. Gopal, Control Systems: Principles and Design" Tata McGraw Hill.

Modes of Evaluation: Quiz/Assignment/ presentation/ extempore/ Written Examination
Examination Scheme:

Components	Class Assessment	End Term
Weightage (%)	50	50

Course Code	Course Name	COs	PO1	PO2	PO3	PO4	PO5	PO6	PO7	PO8	PO9	PO10	PO11	PO12	PSO1	PSO2	PSO3
MEE12023	Automatic Controls	CO(MEE12023).1	2				1	1	1	1		1		1		3	
		CO(MEE12023).2	2				1	1	1	1		1		1		3	
		CO(MEE12023).3	2		3		1	1	1	1		1		1		3	
		CO(MEE12023).4		3	3	2	1	1	1	1		1		1		3	
		CO(MEE12023).5			3	2	1	1	1	1		1		1		3	
		CO(MEE12023).6			3	2	1	1	1	1		1		1		3	
		CO(MEE12023)	2	3	3	2	1	1	1	1		1		1		3	

MEE11011	**Design of Mechanical Systems**	L	T	P	C
Version 1.0		3	0	0	3
Pre-requisites/Exposure	Engineering Mechanics, Kinematics of Machines				
Co-requisites	Kinematics & Dynamics of Machines Lab				

Course Objectives

1. To teach students concepts of planar, inverse, Newtonian dynamic analysis of mechanisms and machines
2. To inculcate concepts of generalized forces and principle of virtual work
3. To exemplify concepts of static and dynamic mass balancing and flywheels
4. To teach linear vibration analysis of one and two degree of freedom rigid body systems

Course Outcomes

On completion of this course, the students will be able to

CO1: Select the technique of force analysis for different components used in machines.
CO2: Understand the dynamic analysis of flywheel for engines as well as for different machines.
CO3: Implement the static and dynamic balancing of high-speed rotors and multi-cylinder engines used in Practice.
CO4: Explain concepts of speed control systems for engines, and gyro-stabilizers for ships and aeroplanes.
CO5: Review the dynamic forces of friction in clutches and brakes.
CO6: Solve using basic vibration analysis techniques.

Catalog Description

Dynamics of machine is a branch of the theory of machine that studies the motion of machines taking into account the forces acting on them. In this course, the focus will be on Dynamic force analysis, Balancing of reciprocating and rotary masses, Mechanism for Speed and Stability Control of Governors and Gyroscope, Clutches and Brakes, Introduction to Vibrations (Single Degree of Freedom).

Course Content

Module 1: Fundamentals of Mechanical Engineering Design (6 Lecture Hours)
Mechanical engineering design, Phases of design process, Design considerations, Engineering Materials and their Mechanical properties, Standards and Codes, Factor of safety, Material selection. Static Load: Normal, Bending, Shear and Combined stresses. Theories of failure.

Module 2: Design for Impact and Fatigue Loads (8 Lecture Hours)
Stress concentration and determination of stress concentration factor, Notch sensitivity. Impact stress due to Axial, Bending and Torsional loads. Fatigue failure: Fatigue strength, Endurance limit, S-N Diagram, Low cycle fatigue, High cycle fatigue, modifying factors: size effect, surface effect. Stress concentration effects, fluctuating stresses, Goodman and Soderberg relationship, stresses due to combined loading on shafts, cumulative fatigue damage.

Module 3: Mechanical Joints and Couplings (10 Lecture Hours)
Riveted Joints, Design of various types of welding joints under different static load conditions, Bolted joints in tension, ISO 898-1 and ISO 965-1 standards for screws, and fasteners, eccentrically loaded riveted, welded and bolted joints, Design of cotter and knuckle joints, Muff coupling.

Module 4: Spur Gear (6 Lecture Hours)
Standard tooth systems, Force analysis, Tooth failure, Strength design, Wear design.

Module 5: Bearings (10 Lecture Hours)
Lubrication: Hydrostatic and Hydrodynamic lubrication, Lubricants, Viscosity chart. Sliding Contact Bearing: Types, Description of Journal bearing, Sommerfeld number, Raimondi & Boyd method for design of journal bearing. Rolling Contact Bearing: Types, Structural features, Design considerations, Static LCC, Rating life, Dynamic LCC, Selection of Ball and Cylindrical roller bearings.

Text Books

1. “Mechanical Vibrations”, V.P. Singh., Dhanpat Rai & Co., 5th Edition, 2016.
2. “Theory of Machines”, S.S Rattan., Tata McGraw-Hill, 3rd Edition, 2009.
3. ."Kinematics and Dynamics of Machinery", Robert L. Norton, Tata McGraw-Hill, 1st Edition, 2009.

Reference Books

1. “Kinematics, Dynamics, And Design of Machinery”, G L Kinzel, K J Waldron, Wiley India, 2nd Edition, 2007.
2. "Mechanisms and Machine Theory", J.S. Rao and R. V. Dukkipati, Wiley-Eastern Ltd., 2nd Edition, 2008.
3. “Theory of Machines and Mechanisms”, J.J. Uicker, G .R. Pennock and J. E. Shigley, Oxford University Press, 3rd Edition, 2009.
4. "Theory of Machines", Thomas Bevan, CBS Publishers and Distributors, 3rd Edition, 2005.

Open Sources:

- http://nptel.ac.in
- http:// ocw.mit.edu/courses/mechanical-engineering
- http://www.myopencourses.com/discipline/mechanical-engineering

Modes of Evaluation: Quiz/Assignment/ presentation/ extempore/ Written Examination

Examination Scheme:

Components	Class Assessment	End Term
Weightage (%)	50	50

Relationship between the Course Outcomes (COs) and Program Outcomes (POs)

Course Code	Course Name	COs	PO1	PO2	PO3	PO4	PO5	PO6	PO7	PO8	PO9	PO10	PO11	PO12	PSO1	PSO2	PSO3
MEE11011	Design of Mechanical Systems	CO(MEE11011).1	2				1	1	1	1		1		1		3	
		CO(MEE11011).2	2				1	1	1	1		1		1		3	
		CO(MEE11011).3	2		3		1	1	1	1		1		1		3	
		CO(MEE11011).4		3	3	2	1	1	1	1		1		1		3	
		CO(MEE11011).5			3	2	1	1	1	1		1		1		3	
		CO(MEE11011).6			3	2	1	1	1	1		1		1		3	
		CO(MEE11011)	2	3	3	2	1	1	1	1		1		1		3	

1=weakly mapped
2= moderately mapped,
3=strongly mapped

Model Question Paper

ADAMAS UNIVERSITY
SCHOOL OF ENGINEERING AND TECHNOLOGY
END-SEMESTER EXAMINATION: JULY 2020

Name of the Program: B. Tech Semester: V Stream: ME
PAPER TITLE: Design of Mechanical System
PAPER CODE: MEE11016
Maximum Marks: 40 Time duration: 3 hours
Total No of questions: 12 Total No of Pages: 02

Instruction for the Candidate:

1. At top sheet, clearly mention Name, Univ. Roll No., Enrolment No., Paper Name & Code, Date of Exam.
2. All parts of a Question should be answered consecutively. Each Answer should start from a fresh page.
3. Assumptions made if any, should be stated clearly at the beginning of your answer.

	Section A (Answer All the Questions) (5 x 1 = 5)		
1.	Write the importance of balancing?	**U**	**CO2**
2.	When the sleeve of Porter governor moves downwards, the governor speed……..	**Ap**	**CO3**
3.	The axis of precession is ……to the plane in which the axis of spin is going to rotate	**Ap**	**CO3**
4.	What are the uses of clutch in power transmission system?	**U**	**CO4**
5.	Define the torsional vibration?	**U**	**CO5**
	SECTION B (Attempt any **Three Questions) (3 x 5 = 15)**		
6.	Define the term co-efficient of fluctuation of speed and co-efficient of fluctuation of energy.	**U**	**CO2**
7.	Explain the static and dynamic balancing.	**U**	**CO3**
8.	Derive an expression for gyroscopic couple..	**Ap**	**CO4**

9.	A four-wheel vehicle of mass 1000Kg moves uniformly in a straight line with the wheels revolving at 10rad/s. The wheels are identical, each with a radius of 0.2m. Then a constant bricking torque is applied to all the wheels and the vehicle experiences a uniform deceleration. For the vehicle to stop in 10s, calculate the braking torque (in N-m) on each wheel?	**Ap**	**CO5**
	SECTION C (Answer Any Two Questions) (2 x 10 = 20)		
10.	Discuss the equilibrium of the following systems: i) Two force members, ii) Three force members, iii) Member with two forces and a torque.	**U**	**CO1**
11.	The mass of an electric motor is 120Kg and it runs at 1500r.p.m. the armature mass is 35Kg and its C.G lies 0.5mm from the axis of rotation. The motor is mounted on five springs of negligible damping so that the force transmitted is one-eleventh of the impressed force. Assume that the mass of the motor is equally distributed among the five springs. Determine: i) Stiffness of each spring. ii) Dynamics force transmitted to the base at the operating speed, and iii) Natural frequency of the system.	**Ap**	**CO6**
12.	The turning moment diagram for a multi-cylinder engine has been drawn to a scale 1mm= 600 N-m vertically and 1mm $=3^0$ horizontally. The intercepted areas between the output torque curve and the mean resistance line, taken in order from 1end, are as follows +52, -124, +92, -140, +85, -72, and +107mm^2, when the engine is running at a speed of 600 r.p.m. If the total fluctuation of speed is not to exceed (+ -1.5%) of the mean, find the necessary mass of the flywheel of radius 0.5m.	**Ap**	**CO2**

MEE11055	**IC Engines & Gas Turbine**	L	T	P	C
Version 1.0		3	0	0	3
Pre-requisites/Exposure	Engineering Thermodynamics				
Co-requisites	IC Engine Lab				

Course Objectives

1. To make students familiar with the design and operating characteristics of modern internal combustion engines.
2. To apply analytical techniques to the engineering problems and performance analysis of internal combustion engines.
3. To study the thermodynamics, combustion, heat transfer, friction and other factors affecting engine power, efficiency and emissions.
4. To introduce students to the environmental and fuel economy challenges facing the internal combustion engine.
5. To introduce students to future internal combustion engine technology and market trends.

Course Outcomes

On completion of this course, the students will be able to

1. Remember the overall concepts of Internal Combustion Engines, their classification, applications, operation and processes.
2. Understand the combustion phenomena in IC engines and based on an in-depth analysis of the combustion process, predict concentrations of primary exhaust pollutants.
3. Examine the various methods of fuel ignition and injection.
4. Deducethe importance of engine lubrication and cooling and learn different methods associated with it.
5. Review the ability to optimize future engine designs for specific sets of constraints (fuel economy, performance, emissions)
6. Solve various problems related to air standard cycles

Catalog Description

Analytical approach to the engineering problem and performance analysis of internal combustion engines. Study of thermodynamics, combustion, heat transfer, friction, and other factors affecting engine power, efficiency, and emissions. Design and operating characteristics of different types of engines.

Course Content

Module 1: Fuel Air Cycles and Actual Cycles (10 Lecture Hours)

Basic Components And Terminology Of IC Engines, Working Of Four Stroke/Two Stroke - Petrol/Diesel Engine, Classification And Application Of IC Engines, Engine Performance And Emission Parameters, Assumptions for fuel–air cycles, Reasons for variation of specific heats of gases, change of internal energy and enthalpy during a process with variable specific heats, isentropic expansion with variable specific heats, effect of variable specific heats on Otto, Diesel and Dual cycle, dissociation, comparison of air standard and fuel air cycles, effect of operating variables, comparison of air standard and actual cycles, effect of time loss, heat loss and exhaust loss in Petrol and Diesel engines, valve and port timing diagrams

Module 2: Combustion in SI and CI Engines (10 Lecture Hours)

Combustion equations, stoichiometric air fuel ratio, enthalpy of formation, adiabatic flame temperature, determination of calorific values of fuels – calorimeter, Stages of combustion in SI engines, abnormal combustion and knocking in SI engines, factors affecting knocking, effects of knocking, control of knocking, combustion chambers for SI engines, Stages of combustion in CI engines, detonation in C.I. engines, factors affecting detonation, controlling detonation, combustion chamber for SI and CI engine

Module 3: Fuel Injection & Ignition Systems (8 Lecture Hours)

Important qualities of IC engine fuels, rating of fuels, Carburetion, mixture requirement for different loads and speeds, simple carburetor and its working, types of carburetors, MPFI, types of injection systems in CI engine, fuel pumps and injectors, types of nozzles, spray formation, Battery and magneto ignition system, spark plug, firing order, quality, quantity & hit and miss governing, Need for supercharging, Effect of supercharging, types of supercharger, methods of supercharging.

Module4: Engine Lubrication and Cooling (6 Lecture Hours)

Lubrication of engine components, Lubrication system – wet sump and dry sump, crankcase ventilation, Types of cooling systems – liquid and air cooled, comparison of liquid and air cooled systems.

Module 5: Measurement and Testing of IC Engines (6 Lecture Hours)

Measurement of indicated power, brake power, fuel consumption and emission, Measurement of friction power by Willan's Line Method and Morse Test, calculation of brake thermal efficiency, brake power and brake specific fuel consumption of IC Engines, variable compression ratio engines, heat balance sheet of IC Engines, Air pollution due to IC engines, Euro I to VI norms, HC, CO and NOx emission, catalytic convertor.

Text Books:

1. Internal Combustion Engine Fundamentals, John B. Heywood, McGraw Hill Education Pvt Ltd.
2. Internal Combustion Engine, V Ganeshan, McGraw Hill Education Pvt Ltd.

Reference Books:

1. Internal Combustion Engine, M.L.Mathur and R.P.Sharma , Dhanpat Rai Publications (P) Ltd.
2. Fundamentals of Internal Combustion engine by H.N.Gupta, PHI Learning.
3. Internal Combustion Engines, Colin Ferguson and Allan Kirkpatrick, Wiley India Pvt. Ltd., 2nd Edition

Modes of Evaluation

Components	Class Assessment	End Term
Weightage (%)	50	50

Relationship between the Course Outcomes (COs) and Program Outcomes (POs)

Course Code	Course Name	COs	PO1	PO2	PO3	PO4	PO5	PO6	PO7	PO8	PO9	PO10	PO11	PO12	PSO1	PSO2	PSO3
MEE11028	IC Engines & Gas Turbines	CO(MEE11028).1	2				1	1	1	1		1		1			3
		CO(MEE11028).2	2				1	1	1	1		1		1			3
		CO(MEE11028).3	2		3		1	1	1	1		1		1			3
		CO(MEE11028).4		3	3	2	1	1	1	1		1		1			3
		CO(MEE11028).5			3	2	1	1	1	1		1		1			3
		CO(MEE11028).6			3	2	1	1	1	1		1		1			3
		CO(MEE11028)	2	3	3	2	1	1	1	1		1		1			3

MEE11062	Data Science and AI in Mechanical Engineering	L	T	P	C
Version 1.0		3	1	0	4
Pre-requisites/Exposure	Passion to learn				
Co-requisites					

Course Objectives:

AI and DS graduates will be able to design, and develop intelligent business applications to solve various industrial problems. They use the latest tools and open source technologies to recommend the required solutions. They can figure out how to evaluate the ethical, legitimate, proficient and social standards of engineering knowledge and practices. These graduates can also exhibit their domain knowledge in data handling, knowledge extraction, mobile and distributed application development, intelligence web/ecommerce development, database administration, computer hardware, networking, education and training and decision support systems using AI and Data Science tools and techniques.

Course Outcomes:

In this course, student will learn how to design, create and implement AI and DS based software solutions to solve actual business problems. This course helps to explore concepts such as AI, Data analytics, Data visualization, Machine Learning, Deep Learning, semantic web and social network analytics, Block chain Technologies, and Data Security and Privacy.

Catalogue Description:

Introduction to the practical application of data science, machine learning, and artificial intelligence. A review of relevant Python tools necessary for applying data science is reviewed, as well as a detailed review of data infrastructure and database construction for data science. A series of detailed industry case studies from experts in the field of data science will be presented.

Course Content

Module 1: Multimodal Engineering Data Generation and Preprocessing (8 Lecture Hours)

Introduction to data science for mechanical engineering, types of engineering data, multimodal data sources, sensor data from lathe machines, IC engines, vibration rigs and thermal systems, experimental data collection, Excel interface and data handling, data cleaning, missing data treatment, noise identification, normalization, data validation, basic statistical analysis, visualization using Excel charts, data preparation for AI applications.

Module 2: Real-Time Data Handling and Signal Processing using Python (10 Lecture Hours)

Introduction to Python and Jupyter Notebook, real-time data concepts, time-series sensor data handling, temperature, vibration and speed signals, data streaming fundamentals, visualization using Matplotlib, basic signal processing, moving average and median filters, Butterworth filter, Kalman filter, noise reduction techniques, anomaly detection, applications in machine health monitoring and predictive maintenance.

Module 3: Data Analysis using NumPy and Pandas for Mechanical Systems (10 Lecture Hours)

NumPy arrays and vectorized operations, matrix operations in mechanical problems, statistical computations, Pandas Series and DataFrames, data import from Excel and CSV, data cleaning and transformation, time-series analysis, correlation and trend analysis, feature extraction from sensor data, handling large industrial datasets, and preprocessing pipelines for machine learning.

Module 4: Engineering Data Management using SQL (8 Lecture Hours)

Introduction to databases, relational database concepts, SQL fundamentals, database design for industrial sensor data, storing experimental and machine data, SQL queries for filtering and aggregation, joins for multimodal

datasets, time-based queries, indexing and performance optimization, integration of SQL databases with Python for analytics and AI applications in manufacturing systems.

Module 5: Machine Learning and AI Applications in Mechanical Engineering (9 Lecture Hours)

Introduction to machine learning concepts, regression models for mechanical data, classification for fault detection, feature selection, model training and validation, AI applications in manufacturing and robotics, predictive maintenance, fault diagnosis, digital twin concepts, optimization using AI, deployment basics, ethical considerations, industry case studies in mechanical engineering.

Modes of Evaluation: Quiz/Assignment/ presentation/ extempore/ Written Examination
Examination Scheme:

Components	Mid Term	Class Assessment	End Term
Weightage (%)	20	30	50

Relationship between the Course Outcomes (COs) and Program Outcomes (POs)

Mapping between COs and POs		
	Course Outcomes (COs)	Mapped Program Outcomes
CO1	Student will learn how to design, create and implement AI and DS based software solutions to solve actual business problems. This course helps to explore concepts such as AI, Data analytics, Data visualization, Machine Learning, Deep Learning, semantic web and social network analytics, Block chain Technologies, and Data Security and Privacy.	PO1, PSO1

		Engineering Knowledge	Problem analysis	Design/development of solutions	Conduct investigations of complex problems	Modern tool usage	The engineer and society	Environment and sustainability	Ethics	Individual or team work	Communication	Project management and finance	Life-long Learning	Plan the manufacturing of given mechanical components and systems using engineering analysis &	Understand the dynamics of machine components and design components including power transmission,	Determine the performance of thermal and fluid systems including IC engines, refrigeration and air-
Course Code	Course Title	PO 1	PO 2	PO 3	PO 4	PO 5	PO 6	PO 7	PO 8	PO 9	PO10	PO11	PO12	PSO 1	PSO 2	PSO 3
MEE11062	Data Science and AI in Mechanical Engineering	3				2								3	1	

1=weakly mapped
2= moderately mapped
3=strongly mapped

MEE11036	Mechanical Vibration and Control	L	T	P	C
Version 1.0		3	0	0	3
Pre-requisites/Exposure	Engineering Mechanics, Engineering Mathematics, Mechanisms and Machines				
Co-requisites	--				

Course Objectives

• To interpret the behaviour of vibrating systems through an understanding of basic principles and the role of mass, stiffness and damping.

• To undertake measurement of vibration quantities and measure modes of vibration on a simple structure

• To develop and equations of motion for free and forced vibration of Mechanical systems.

Course Outcomes

On completion of this course, the students will be able to

CO1. Understand undamped & damped free vibrations, and forced vibrations of single DoF systems

CO2. Estimate the undamped & damped free vibrations, and forced vibrations of single DoF systems

CO3. Determine the requirements of various vibration measuring instruments for response analysis.

CO4. Analyze continuous systems for their amplitude of vibration and mode shapes for common boundary conditions

CO5. Review various passive and active vibration control techniques

CO6. Simulate the second-order single DoF vibrating systems

Catalogue Description

This course is intended for all those who want to understand vibration, its control, and its management. Thus, the course is open to students of engineering and science, and also to all those who from the industry and research organizations.

Course Content

Module 1: Free and forced vibrations of damped single degree of freedom systems

Concept and types of damping, equation of motion, study of free vibration response of viscous damped systems for cases of under damping, critical damping and over damping, logarithmic decrement, loss factor. Coulomb damping, structural damping, equivalent viscous damping. Steady state solution for forced vibration system with viscous damping, forced vibration due to reciprocating & rotating unbalance mass and support motion, undamped whirling of shaft with single disc and concept on critical speed

Module 2: Undamped vibration of two degrees and multi-degrees of freedom systems

Free vibration of spring coupled and mass coupled systems, mode shapes, semi definite systems, co-ordinate coupling, undamped dynamic vibration absorber, torsional vibration of two rotor systems. Generalized co-ordinates, matrix method, normal mode, influence coefficients, orthogonality of mode shapes, Holzer's method, Torsional vibration of three and multi rotor systems, Dunkerley's method

Module 3: Experimental Methods in Vibration Analysis

Vibration measurement scheme, measuring devices, Frequency measurement, Vibration exciter, Signal analysis, Time-domain and frequency-domain vibration analysis, Modal parameter identification, Vibration trouble-shooting and diagnosis.

Module 4: Continuous systems

Longitudinal and torsional vibration of rods, Transverse vibration of Euler beams: assumptions & derivation of equation of motion for various boundary conditions, characteristics equations and mode shapes.

Module 5: Vibration Control

Sources of vibration, ISO specified acceptable limits, Vibration control scheme, Passive and active methods, Excitation reduction at source, Source isolation, System modification, Vibration absorption, Introduction to active vibration control.

Text Books:

1. "Mechanical Vibrations" S.S. Rao, Pearson Education Inc, 6th Edition, 2017.

2. "Mechanical Vibrations", V.P. Singh, Dhanpat Rai & company Pvt. Ltd. 3rd Edition, 2006.

3. "Principles of Passive and Active Vibration Control", A.K. Mallick and S. Chatterjee, Affiliated East-West Press, 1st Edition, 2014.

Reference Books:

1. "Mechanical Vibrations" S. Graham Kelly, Schaum's outline series, Tata McGraw Hill, Special Indian Edition., 2007.

2. "Introductory Course on theory and Practice of Mechanical Vibrations", J.S. Rao & K. Gupta, New Age International Publication, New Delhi, 2nd Edition, 2014. 3. "Mechanical vibrations", J. S. Mehta and A.S. Kailey, S. Chand & Company, 1st Edition, 2012.

Modes of Evaluation: Quiz/Assignment/ presentation/ extempore/ Written Examination

Examination Scheme:

Components	**Attendance**	**Internal Assessment**	**MTE**	**ETE**
Weightage (%)	**10**	**30**	**20**	**40**

Relationship between the Course Outcomes (COs) and Program Outcomes (POs)

Course Code	Course Name	COs	PO1	PO2	PO3	PO4	PO5	PO6	PO7	PO8	PO9	PO10	PO11	PO12	PSO1	PSO2	PSO3
MEE1 1036	Mechanical Vibration & Control	CO(MEE11036).1	2				1	1	1	1		1		1		3	
		CO(MEE11036).2	2				1	1	1	1		1		1		3	
		CO(MEE11036).3	2		3		1	1	1	1		1		1		3	
		CO(MEE11036).4		3	3	2	1	1	1	1		1		1		3	
		CO(MEE11036).5			3	2	1	1	1	1		1		1		3	
		CO(MEE11036).6			3	2	1	1	1	1		1		1		3	
		CO(MEE11036)	2	3	3	2	1	1	1	1		1		1		3	

1=weakly mapped

2= moderately mapped

3=strongly mapped

MEE11063	**Refrigeration and Air Conditioning**	L	T	P	C
Version 1.0		3	0	0	3
Pre-requisites/Exposure	Engineering Thermodynamics, Thermal Engineering				
Co-requisites	RAC Lab				

Course Objectives

1. Learning the fundamental principles and different methods of refrigeration and air conditioning.
2. Study of various refrigeration cycles and evaluate performance using Mollier charts and/ or refrigerant property tables.
3. Comparative study of different refrigerants with respect to properties, applications and environmental issues.
4. Understand the basic air conditioning processes on psychometric charts, calculate cooling load for its applications in comfort and industrial air conditioning.
5. Study of the various equipment-operating principles, operating and safety controls employed in refrigeration air conditioning systems.

Course Outcomes

On completion of this course, the students will be able to

1. Remember the fundamental principles and applications of refrigeration and air conditioning system & cooling capacity and coefficient of performance of vapour compression refrigeration systems.
2. Understand the concepts of mechanism and area of applications of vapour absorption refrigeration system.
3. Examine the properties, applications and environmental issues of different refrigerants.
4. Explain the process of aircraft refrigeration system and detail applications of unorthodox refrigerants.
5. Assess the cooling load for air conditioning systems used for various applications, operate and analyze the refrigeration and air conditioning systems and use P-h, T-S and Psychometric charts to solve refrigeration and Air conditioning design problems.
6. Solve the various problems related to refrigeration and air conditioning

Catalog Description

The course consists of different refrigeration cycles and understanding of psychrometry and psychometric processes used for the purpose of air-conditioning. Further, the comfort air-conditioning and indoor environment health are also addressed in this course.

Course Content

Module 1: Basics of Refrigeration [8]

Introduction to Refrigeration: Concept of refrigeration and its applications. Methods of refrigeration (ice refrigeration, evaporative cooling, vapor compression, vapor absorption, and cryogenics).
Thermodynamic Principles: Carnot cycle and reversed Carnot cycle. Coefficient of Performance (COP) and its significance.
Refrigerants: Properties of refrigerants. Classification of refrigerants (natural, synthetic).
Environmental considerations: Ozone Depletion Potential (ODP), Global Warming Potential (GWP).

Module 2: Vapor Compression Refrigeration System [8]

Principle and Components: Simple vapor compression cycle.
Major components: Compressor, condenser, expansion valve, evaporator.
Performance Analysis: Pressure-enthalpy (P-h) diagram. Effect of operating conditions on system performance.

Advanced Vapor Compression Systems: Multi-stage compression. Cascade refrigeration systems.

Module 3: Vapor Absorption and Other Systems [8]

Vapor Absorption Refrigeration: Working principle and comparison with vapor compression systems. Common refrigerant-absorbent pairs (e.g., ammonia-water, water-lithium bromide).

Specialized Refrigeration Systems: Thermoelectric refrigeration. Air refrigeration systems (Bell-Coleman cycle). Applications in aircraft and cryogenics.

Module 4: Air Conditioning Systems [8]

Psychrometrics: Properties of moist air and psychrometric chart.

Processes: Sensible heating/cooling, humidification, dehumidification, adiabatic mixing.

Cooling Load Calculations: Factors affecting cooling load. Estimation of building cooling loads.

Air Conditioning Systems: Centralized and decentralized systems. Classification based on applications (residential, commercial, industrial).

Air Distribution: Duct systems and air flow in ducts. Fans and blowers.

Module 5: Applications and Modern Trends [8]

Refrigeration Applications: Cold storage and transport. Industrial and food processing refrigeration.

Air Conditioning Applications: Comfort air conditioning in residential and commercial buildings. Industrial air conditioning.

Modern Developments: Green and energy-efficient systems. Smart air conditioning systems. Renewable energy-based refrigeration (solar cooling, etc.).

Text Books:

1. Refrigeration and air conditioning, C.P.Arora, Tata McGraw-Hill, (2000)
2. Refrigeration and air conditioning, Wilbert F. Stoecker and Jerold W. Jones, McGraw-Hill , (1986)

Reference Books:

1. Principles of refrigeration, Roy J. Dossat, Prentice Hall (2001)
2. Refrigeration & Air Conditioning, Arora and Domkundwar, Dhanpat Rai & Co.
3. Refrigeration and Air Conditioning, Manohar Prasad, New Age International (2003)

Modes of Evaluation

Components	Class Assessment	End-Term
	50	**50**

Relationship between the Course Outcomes (COs) and Program Outcomes (POs)

Course Code	Course Name	COs	PO1	PO2	PO3	PO4	PO5	PO6	PO7	PO8	PO9	PO10	PO11	PO12	PSO1	PSO2	PSO3
MEE11063	Refrigeration and Air Conditioning	CO(MEE11063).1	2				1	1	1	1		1		1			3
		CO(MEE11063).2	2				1	1	1	1		1		1			3
		CO(MEE11063).3	2		3		1	1	1	1		1		1			3
		CO(MEE11063).4		3	3	2	1	1	1	1		1		1			3
		CO(MEE11063).5			3	2	1	1	1	1		1		1			3
		CO(MEE11063).6			3	2	1	1	1	1		1		1			3
		CO(MEE11063)	2	3	3	2	1	1	1	1		1		1			3

1=weakly mapped
2= moderately mapped
3=strongly mapped

ECO11505	Economics for Engineers	L	T	P	C
Version 1.0		3	0	0	3
Pre-requisites/Exposure	Engineering Mathematics – I and Engineering Mathematics – II				
Co-requisites	--				

Course Objectives

1. Prepare engineering students to function in the business and management side of professional engineering practice.
2. Help students in general to analyse, understand and explain the past, present economic conditions of the country.
3. To forecast the future course of changes and development through their knowledge of policies and programmes set by the governments and other development agencies.
4. Evaluate the economic theories, cost concepts and pricing policies.
5. Apply the concepts of financial management for project appraisal.

Course Outcomes

On completion of this course, the students will be able to

CO1. **Understand** the basic economic concepts and make economic analyses in the decision making.

CO2. **Apply** principals of economics to analyze the behaviour of consumers and producers in a well-functioning economy and also in case of market failures.

CO3. **Develop** the ability to account for time value of money using factors and formulas, estimate annual and future worth comparisons for cash flows.

CO4. **Understand** how factor market works, identify the manpower and resources management, need of credit/finance for initiating and accelerating projects.

Catalog Description

This paper introduces students to the terminology and analytic principles used in microeconomics, which is broadly defined as the study of markets, and to the application of these conceptual toolsto several policy issues. As the design and manufacturing process become more complex, an engineer is required to make decisions that involve money more than ever before. The competent and successful engineer at present must have an improved understandingof the principles of economics. This paper is concerned the analysis of individual behaviors and market structure, and systematic evaluation of the benefits and costs of projects involving engineering design and analysis.

Course Content

Unit I: Basic Concepts of Economics: 5 lecture hours

Introduction to the Literature of Micro-economic scentering around Decision Making at Individual Level. Some Fundamental Concepts: Maximization, Equilibrium and Efficiency.

Unit II: Theories of Economics: 12 lecture hours

The Theory of Consumer Choice and Demand, the Theory of Supply, market equilibrium, market structure, market failure and environmental issues, Game Theory, concept of yield and

Theories of Term Structure, the Theory of Asset Pricing, decision-making under uncertainty: riskand insurance.

Unit III: Sustainability Study of a Project: 10 lecture hours
Budget plan, estimation of the project cost, prices, fees and cost recovery, financing of recurrentcosts, sustainability of the activities generated by the project.

Unit IV: Economic Feasibility Study: 12 lecture hours
Problem of pricing under oligopoly, problem of market stagnation, problem of volatility in openeconomy, problem of global meltdown, problem of financing a project.

Unit V: Project Report: 6 lecture hours
Facets of project viability – commercial, technical, financial, outline of a model project report, areal life case study.

Text Books:

1. R. Panneersalvam, *Engineering Economics*, 2nd Ed., Prentice Hall of India, 2014.
2. James Riggs, *Engineering Economics*, 4th Ed., McGraw Hill Education, 2004.

Reference Books:

1. Donald G. Newnan, Ted G. Eschenbach and Jerome P. Lavelle, *Engineering Economic Analysis*, 13th Ed., Oxford University Press, 2017.
2. Chan S. Park, *Contemporary Engineering Economics*, 6th Ed., Pearson, 2015.

Modes of Evaluation: Quiz/Assignment/ presentation/ extempore/ Written Examination
Examination Scheme:

Components	Internal Assessment	MTE	ETE
Weightage (%)	30	20	50

Relationship between the Course Outcomes (COs) and Program Outcomes (POs)

Mapping between COs and POs		
	Course Outcomes (COs)	**Mapped Program Outcomes**
CO1	**Understand** the basic economic concepts and make economic analyses in the decision making.	**PO2, PO3, PO11, PSO1,PSO2**
CO2	**Apply** principals of economics to analyze the behaviour of consumers and producers in a well-functioning economy and also in case of market failures.	**PO2, PO4, PO11, PSO1,**
CO3	**Develop** the ability to account for time value of money using factors and formulas, estimate annual and future worth comparisons for cash flows.	**PO2, PO3, PO4, PSO1**
CO4	**Understand** how factor market works, identify the manpower and resources management, need of credit/finance for initiating and accelerating projects.	**PO2, PO3, PO4, PSO1**

Course Code		
ECO11 505	Course Title	
Economics for Enginee		
-	PO 1	Engineering Knowledge
3	PO 2	Problem analysis
3	PO 3	Design/development of solutions
3	PO 4	Conduct investigations of complex problems
-	PO 5	Modern tool usage
2	PO 6	The engineer and society
--	PO 7	Environment and sustainability
--	PO 8	Ethics
-	PO 9	Individual or team work
--	PO 10	Communication
3	PO 11	Project management and finance
-	PO 12	Life-long Learning
3	PSO 1	Apply the design principles in system engineering, manufacturing design, and engineering management
2	PSO 2	Plan the manufacturing of given mechanical components and systems using engineering analysis & design tools, process
-	PSO 3	Understand the dynamics of machine components and design components including power transmission, pressure vessels,
--	PSO 4	Determine the performance of thermal and fluid systems including IC engines, refrigeration and air-conditioning, and

	Industrial Automation	L	T	P	C
		3	0	3	4.5
Pre-requisites/Exposure	a. Basic electronics and electrical				
Co-requisites					

Course Objectives

1. To recognize industrial control problems suitable for PLC control, conceptualizing solutions to those problems,
2. Use modern programming software to develop, enter, and debug programs to solve above problems
3. To install PLC units, interface them with I/O channels and standard data networks
4. To troubleshoot I/O and networking problems to produce functional control systems.

Course Outcomes

On completion of this course, the students will be able to

CO1. Explain different PLC and its application in automation Industry.
CO2. Formulate ladder logic programming technique for PLC.
CO3. Analyze concepts Data Acquisition system and its importance.
CO4. Design a simple process control of automation industry.
CO5. Design different sequential control system using PLC.
CO6. Build a PLC for automating the given process

Catalog Description

Introduces Programmable Logic Controller programming. Includes PLC components, architecture, execution cycle, data file type and management, variable monitoring, and basic programming instructions.

Course Content

Unit I: **4 lecture hours**

Basic of automation: Need of automation , Benefits of automation , Programmable Logic Controller (PLC) Overview, Introduction ,PLC History ,PLC in Industrial Automation , PLC architecture , Ladder Logic and Relays Application areas – Process industries, Buildings, Robotics, Infrastructure, Aerospace, Railways, Automobiles, Telecom, Electrical distribution, Medical

Unit II: **10 lecture hours**

PLC: Block Diagram & Principle of Working , PLC Classification based on Type and size , PLC characteristics – CPU, Racks, Power Supply, Memory, Input & Output Modules, Application Specific Modules, Speed of Execution, Communication, and Redundancy.

Unit III: **15 lecture hours**

PLC hardware: PLC Inputs and Outputs Types , Source and Sink Concept , Description and Function of various PLC Modules- I/O Modules and Communication Modules ,PLC Hardware Configuration , Addressing of PLC I/O , Diagnostic Features , PLC Wiring , Interfacing with Sensors and Actuators

Unit IV: **10 lecture hours**

PLC programming: Definition and Use of Bits and Words ,Introduction to PLC Programming Languages- Ladder (LD), Instruction List (IL), Structured Text (ST), Functional Block Diagram (FBD), Sequential function charts (SFCs) , PLC Programming Software, its installation and use with a PC , Ladder Program Development with Software , Instruction Set in Ladder – NO, NC, Set, Reset, Timers, Counters, Comparison, Arithmetic, Logical, Move, Drum Controller , Programming Examples in Ladder with simple applications , PLC Instructions ,Data Transfer Instruction , Arithmetic Instructions , Data Comparison Instructions , Data Manipulation Instructions ,Timer Instructions , Counter Instructions , Program Control Instructions , Pulse Instruction , PID Instruction , Different Programming Techniques , Trouble shooting PLC.

Unit V: **9 lecture hours**

HMI & SCADA: Local Operator Panels & Need for HMI , Types and Characteristics of Local HMI operator panels , Introduction to Programming of HMI Panels , Interface between HMI Panels and PLC , Functions of HMI and SCADA , Creating static & dynamic objects with animation , Alarm management , Real time & historical trends ,Recipe Management , Data base Configuration , Definition of SCADA , Functional Block Diagram. , Communication between PLC and SCADA, SCADA Applications, Communication Standards.

Text Books

1. Kevin Collins, PLC Programming for Industrial Automation, by
2. Starr Brian, Basics of Industrial Automation, by Brian Starr
3. Fiset Yves, Human-Machine Interface Design for Process Control Applications

Reference Books

1. *Hackworth John R., Programmable Logic Controllers: Programming Methods and Applications*

Components	Class Assessment	End Term
Weightage (%)	50	50

Course Code	Course Name	COs	PO 1	PO 2	PO 3	PO 4	PO 5	PO 6	PO 7	PO 8	PO 9	PO 10	PO 11	PO 12	PSO 1	PSO 2	PSO 3
	Industrial Automation	CO(CourseCode).1	2				1	1	1	1		1		1	3		
		CO(CourseCode).2	2				1	1	1	1		1		1	3		
		CO(CourseCode).3	2		3		1	1	1	1		1		1	3		
		CO(CourseCode).4		3	3	2	1	1	1	1		1		1	3		
		CO(CourseCode).5			3	2	1	1	1	1		1		1	3		
		CO(CourseCode).6			3	2	1	1	1	1		1		1	3		
		CO(Course Code)	2	3	3	2	1	1	1	1		1		1	3		

MEE12024	**Mechanisms and Machines Lab**	L	T	P	C
Version 1.0		0	0	2	1
Pre-requisites/Exposure	Kinematics of Machines				
Co-requisites	Dynamics of Machines				

Course Objectives

1. To develop a solution-oriented approach by in depth knowledge of Theory of Machines.
2. To address the underlying concepts, methods and application of different machines.
3. To impart skills to analyze the position, velocity, acceleration of mechanisms and dynamics of machines.

Course Outcomes

On completion of this course, the students will be able to

CO1. Memorize the balancing of rotary and reciprocating masses.

CO2. Understand the concept of mechanism for Speed and Stability Control by the help of governors and gyroscope.

CO3. Display the principle of torque analysis of friction clutches, brakes and dynamometers.

CO4. Analyze the vibrational problems in a single degree of freedom system like Simple Harmonic Motion and Simple spring Mass system.

CO5. Experiment on dynamic force analysis with the help of D'Alembert's Principle.
CO6. Devise simple mechanisms

Catalogue Description

Kinematics and Dynamics of machine lab aims to teach the students about the motion of machines taking into account the forces acting on them. In this course, the focus will to conduct the experiments on belt drives, Cam, Gyroscope dynamic force analysis, balancing of reciprocating and rotary masses and Stability Control of Governors. Moreover, the attention is also devoted to give physical realization of vibration of machines and how to control them. The focus is to empower the students with practical knowledge of mechanisms and machines to enable them to solve complex engineering problems.

Course Content

List of Experiments
1. Study on inversions of four bar mechanisms
2. Study on different gear trains
3. Determination of frictional coefficient between belt and pulley
4. Experiment on cam follower mechanism
5. Determination of gyroscopic couple on a spinning disc subjected to applied torque
6. Determination of controlling force at a given speed, governor effort & power for a Porter governor
7. Determination of controlling force at a given speed, governor effort & power for a Hartnell governor
8. Static and dynamic balancing of rotating mass
9. Balancing of reciprocating mass
10. Longitudinal Vibration of Helical Spring.
11. Study the response of forced damped vibration of a simply supported beam with concentrated loads.

Text Books:

1. "Mechanical Engineering Design", Joseph E Shigley and Charles R. Mischke, McGraw Hill International edition, 6th Edition, 2009.

Reference Books:

1. "Machine Design" Robert L. Norton, Pearson Education Asia, 5th Edition, 2018.
2. "Engineering Design", George E. Dieter, Linda C Schmidt, McGraw Hill India, 2nd Edition, 2013.
3. "Design of Machined Elements", S C Pilli and H. G. Patil, I. K. International Publisher, 2nd Edition, 2019.
4. Fundamentals of Machine Component Design, Robert C. Juvinall and Kurt M Marshek, Wiley India Pvt. Ltd., 3rd Edition, 2007

Modes of Evaluation: Quiz/Assignment/ presentation/ extempore/ Written Examination
Examination Scheme:

Components	Class Assessment	End Term
Weightage (%)	50	50

Relationship between the Course Outcomes (COs) and Program Outcomes (POs)

Course Code	Course Name	COs	PO 1	PO 2	PO 3	PO 4	PO 5	PO 6	PO 7	PO 8	PO 9	PO10	PO11	PO12	PSO1	PSO2	PSO3
MEE12024	Mechanisms & Machines Lab	CO(MEE12024).1	2				1	1	1	1		1		1		3	
		CO(MEE12024).2	2				1	1	1	1		1		1		3	
		CO(MEE12024).3	2		3		1	1	1	1		1		1		3	
		CO(MEE12024).4		3	3	2	1	1	1	1		1		1		3	
		CO(MEE12024).5			3	2	1	1	1	1		1		1		3	

		CO(MEE12024).6			3	2	1	1	1	1		1		1		3	
		CO(MEE12024)	2	3	3	2	1	1	1	1		1		1		3	

1=weakly mapped
2= moderately mapped
3=strongly mapped

Name: **Enrolment No:**	

Course: Machines and Mechanism Lab (MEE12024)

Program: B.Tech (ME) **Semester: VI**

Time: 03 hrs. **Max. Marks: 40**

Instructions:

Attempt the Questions from (Carrying 40 Marks)

(Answer the Questions) (40 x 1 = 40)

Sl. No.	Laboratory Questions	Knowledge Level
1	Compare the theoretical and experimental results of the following for the quick return motion mechanism employed in a shaping machine: • Length of cutting/forward stroke • Ratio of time of forward stroke and return stroke	**Apply**
2	Plot the experimental Ray diagram for the power drive of the chuck of a lathe.	**Apply**
3	For a Porter governor, compare the theoretical and experimental speeds for various sleeve lifts.	**Apply**
4	Compare the applied couple and the gyro-couple for a spinning disc undergoing steady precession.	**Apply**
5	Compare the theoretical and experimental frequencies of longitudinal free vibration of a spring-mass system while varying the mass of the system.	**Apply**
6	Carry out dynamic balancing of a rotor system with unbalance present in three different axial planes.	**Apply**

MEE12031	Refrigeration and Air Conditioning Lab	L	T	P	C
Version 1.0		0	0	2	1
Pre-requisites/Exposure	Thermodynamics , Heat Transfer Engineering				
Co-requisites	--				

Course Objectives:

1. To understand the concept of Refrigeration and Air refrigeration system
2. To acquire knowledge of methods of Refrigeration and Air refrigeration system
3. To acquire knowledge of Refrigeration and Air refrigeration system
4. To acquire knowledge of vapour compression and vapour absorption refrigeration system.
5. To acquire knowledge of refrigerants

Course Outcomes:

On completion of this course, the students will be able to

CO1 Remember the working of domestic refrigerator and Split Airconditioning systems.
CO2 Understand the cooling capacity, COP, Power of a VCR system.
CO3 Apply the RSHF using Psychrometric chart.
CO4 Analyze performance of Expansion devices in VCR system.
CO5 Detect the cooling capacity of an evaporative air cooler.
CO6 Devise the procedure for developing a small refrigeration/ air conditioning unit

Catalog Description:

Refrigeration & Air Conditioning Lab gives idea on hands on practice with refrigerating circuits and develop air-conditioning systems. This laboratory is scheduled for 5th semester Mechanical engineering students. Apart from curriculum, some additional experimental setups are there which helps the students to enhance their knowledge. Students also get opportunity to implement their ideas through various application oriented micro projects.

Course Content

List of Experiments (Any ten)	
1	To study of domestic Refrigeration.
2	To study the performance of domestic Refrigeration Test Rig.
3	To study of domestic Window AC
4	To Study the Performance of the Window AC Testing rig.
5	Determination t of COP of a Window Air-Conditioner
6	Determination t of COP of a Window Air-Conditioner
7	Determination t of COP of a Vapour Compression Refrigeration System
8	Determination t of COP of a Thermoelectric Refrigeration System

Reference Books

1. Textbook of Refrigeration and Air Conditioning - RS Khurmi

Modes of Evaluation: Quiz/Assignment/ presentation/ extempore/ Written Examination
Examination Scheme:

Components	Class Assessment	End Term
Weightage (%)	50	50

Relationship between the Course Outcomes (COs) and Program Outcomes (POs)

Course Code	Course Name	COs	PO 1	PO 2	PO 3	PO 4	PO 5	PO 6	PO 7	PO 8	PO 9	PO 10	PO 11	PO 12	PSO 1	PSO 2	PSO 3
MEE12031	Refrigeration and Air Conditioning Lab	CO(MEE12031).1	2				1	1	1	1		1		1			3
		CO(MEE12031).2	2				1	1	1	1		1		1			3
		CO(MEE12031).3	2		3		1	1	1	1		1		1			3
		CO(MEE12031).4		3	3	2	1	1	1	1		1		1			3
		CO(MEE12031).5			3	2	1	1	1	1		1		1			3
		CO(MEE12031).6			3	2	1	1	1	1		1		1			3
		CO(MEE1203)	2	3	3	2	1	1	1	1		1		1			3

1=weakly mapped,
2= moderately mapped,
3=strongly mapped

	Industrial Automation Lab	L	T	P	C
		0	0	2	1
Pre-requisites/Exposure	a. Basic electronics and electrical				
Co-requisites					

Course Objectives

1. To recognize industrial control problems suitable for PLC control, conceptualizing solutions to those problems,
2. Use modern programming software to develop, enter, and debug programs to solve above problems
3. To install PLC units, interface them with I/O channels and standard data networks
4. To troubleshoot I/O and networking problems to produce functional control systems.

Course Outcomes

On completion of this course, the students will be able to

CO1. Identify different PLC and its application in automation Industry.
CO2. Understand ladder logic programming technique for PLC.
CO3. Apply concept of Data Acquisition system and its importance.
CO4. Analyze a simple process control of automation industry.
CO5. Evaluate different sequential control system using PLC.
CO6. Program a PLC for a given process

Catalog Description

Introduces Programmable Logic Controller programming. Includes PLC components, architecture, execution cycle, data file type and management, variable monitoring, and basic programming instructions.

Course Content

List of Experiments:

Experiment 1

Design a PLC ladder diagram to construct an alarm system which operates as follows
If one input is on, nothing happens
If any 2 inputs are on, red light turns on
If any 3 inputs are on, an alarm sirens sound
And if all the inputs are on then the fire department is to be notified.

Experiment 2

A conveyor is supposed to have exactly 45 parts on it. You have three indicating lights to indicate the conveyor count status: less than 45, yellow: exactly 45, green: and more than 45, red. The count of parts on the conveyor is set at 45 each morning by an actual count of parts. There are two sensors on the conveyor, one is actuated by parts entering

the conveyor, and the other is actuated by parts leaving. Design a PLC program to carry out this process.

Experiment 3

Design and Implement Ladder logic algorithm for two double acting pneumatics cylinder using PLC. (A+ B+ A- B-).

Experiment 4

Design and Implement Ladder logic algorithm for double acting pneumatics cylinders with overlapping sequence using PLC (A+ B+ B- A-).

Experiment 5

Design and Implement Ladder logic algorithm for three double acting pneumatics cylinder with normal sequence using PLC. (A+ B+ C+ A- B- C-)

Experiment 6

There are 3 mixing devices on a processing line A,B,C. After the process begin mixer-A is to start after 7 seconds elapse, next mixer-B is to start 3.6 second after A. Mixer-C is to start 5 seconds after B. All then remain ON until a master enable switch is turned off. Write PLC ladder diagram, timing diagram and realize the same.

Experiment 7

Design and Implement Ladder logic algorithm for three double acting pneumatics cylinder with overlapping sequence using PLC. (A+ B+ C+ C- B- A-).

Experiment 8

In certain process control application when the count reaches 25, a paint spray is to run for 40 seconds. Design, construct, and test PLC circuits for this process.

Experiment 9

A tank filling device simulator consists of 3 tanks that are equipped with signal encoders. The tank filling device simulator is switched on using the S1 pushbutton “Start”. For switching the device simulator off, the S2 pushbutton “Stop” is used. For the "Max" (full) notifications, the signal encoders S3, S5 and S7 are used. For the "Min" (empty) notifications, the signal encoders S4, S6 and S8 are used. The storage tanks can be arbitrarily filled and emptied by hand. For the filling, the valves Y1, Y2 and Y3 are used. A control is to secure that after a "Min" (empty) notification occurred, only 1 tank can be filled. The filling of the tank continues until the corresponding "Max" (full) notification has occurred.

a. Determine the type of the signal encoders and receivers and prepare an assignment list.
b. Prepare a clamp connection plan.
c. Prepare the PLC program.

Experiment 10

The selective band switch is switched on using the S1 pushbutton “Start” and switched off using the S2 pushbutton “Stop”. On a conveyor band, the selective band switch is supplied with long and short work pieces in an arbitrary order. After switch on of the

system, the selective band switch is to drive into position "A". If a long piece runs through the scanning device, all 3 light barriers will be covered for a short period of time and the selective band switch remains in position "A". If a short piece runs through the scanning device, the light barriers are activated individually. The switch moves in position "B". The position "B" must be maintained for a period of 5 s. After expiry of the time or if a long work piece is fed in, the selective band switch is to return into position "A" again. Pump 1: 3 kW. Optionally, the cylinder switches S3 and S4 can be used for monitoring the selective band switch position.

a. Prepare the PLC ladder logic program.

Experiment 11

The control is switched on using the S1 pushbutton “Start” and switched off using the S2 pushbutton “Stop”. Preferably, the three-phase motor with closed Dahlander winding is to be started up in low speed (delta connection) via the pushbutton S3 and switched over to high speed (Twinstar) directly via the pushbutton S4. Switch-over to the low speed may only be completed via the S2 pushbutton “Stop” (mandatory zero) if after activation of the stop pushbutton, a waiting period of 5 s has expired. If the S4 pushbutton (high speed) is activated, contactor K1 is deactivated and simultaneously, contactors K2 and K3 are activated. Now, the motor is running with high speed. It must be ensured that contactor K1 has never been activated together with K2 and K3.

Experiment 12

Design and implement ladder logic to interface analog sensor with PLC.

Experiment 13

To control the speed of the DC motor using analog input and PWM.

Text Books

1. Kevin Collins, PLC Programming for Industrial Automation, by
2. Starr Brian, Basics of Industrial Automation, by Brian Starr
3. Fiset Yves, Human-Machine Interface Design for Process Control Applications

Reference Books

1. *Hackworth John R., Programmable Logic Controllers: Programming Methods and Applications*

Modes of Evaluation:

Components	Class Assessment	End-Term
Weightage (%)	**50**	**50**

Relationship between the Course Outcomes (COs) and Program Outcomes (POs)

Course Code	Course Name	COs	PO 1	PO 2	PO 3	PO 4	PO 5	PO 6	PO 7	PO 8	PO 9	PO 10	PO 11	PO 12	PS O1	PS O2	PS O3
	Industrial Automation Lab	CO(CourseCode).1	2				1	1	1	1		1		1	3		
		CO(CourseCode).2	2				1	1	1	1		1		1	3		
		CO(CourseCode).3	2		3		1	1	1	1		1		1	3		
		CO(CourseCode).4		3	3	2	1	1	1	1		1		1	3		
		CO(CourseCode).5			3	2	1	1	1	1		1		1	3		
		CO(CourseCode).6			3	2	1	1	1	1		1		1	3		
		CO(Course Code)	2	3	3	2	1	1	1	1		1		1	3		

1=weakly mapped
2= moderately mapped
3=strongly mapped

MEE12029	**Internal Combustion Engines Lab**	L	T	P	C
Version 1.0		0	0	2	1
Pre-requisites/Exposure	Manufacturing Technology				
Co-requisites	Dynamics of Machines				

Course Objectives

Course Outcomes

On completion of this course, the students will be able to

1. Memorize the overall concepts of Internal Combustion Engines, their classification, applications, operation and processes.
2. Understand combustion phenomena in IC engines and based on an in-depth analysis of the combustion process, predict concentrations of primary exhaust pollutants.
3. Examine the various methods of fuel ignition and injection.
4. Illustrate the importance of engine lubrication and cooling and learn different methods associated with it.
5. Evaluate future engine designs for specific sets of constraints (fuel economy, performance, emissions)

Catalogue Description

Digital Manufacturing (DM) is the fastest and easiest way to transform a concept into a reality. DM belongs to a much larger trend known as the Fourth Industrial Revolution, which combines CAD design, digital manufacturing, robotics, sensors & data and analytics to redefine industrial production.

Course Content

List of Experiments

1. TO STUDY THE CUT MODELS OF I.C. ENGINE.
2. TO STUDY THE ACTUAL VALVE TIMING DIAGRAM OF 4-STROKE PETROL ENGINE.
3. TO STUDY THE ACTUAL VALVE TIMING DIAGRAM OF 4-STROKE DIESEL ENGINE.
4. TO DETERMINE THE FLASH POINT & FIRE POINT OF THE DIESEL ENGINE BY MEANS OF THE CLEVELAND APPARATUS.
5. TO DETERMINE THE CALORIFIC VALUE OF DIESEL BY BOMB CALORIMETER.
6. TO PREPARE THE HEAT BALANCE SHEET BY CONDUCTING PERFORMANCE TEST ON SINGLE CYLINDER 4-STROKE DIESEL ENGINE(WITH ELECTRICAL BRAKE DYNAMOMETER)
7. TO DETERMINE THE LOAD TEST ON A SINGLE CYLINDER 4-STROKE DIESEL ENGINE(WITH ROPE BRAKE DYNAMOMETER)
8. TO DETERMINE THE MORSE TEST ON A MULTI CYLINDER PETROL ENGINE.

Text Books:

Reference Books:

Modes of Evaluation: Quiz/Assignment/ presentation/ extempore/ Written Examination
Examination Scheme:

Components	Class Assessment	End Term
Weightage (%)	50	50

Relationship between the Course Outcomes (COs) and Program Outcomes (POs)

Course Code	Course Name	COs	PO 1	PO 2	PO 3	PO 4	PO 5	PO 6	PO 7	PO 8	PO 9	PO 10	PO 11	PO 12	PSO 1	PSO 2	PSO 3
MEE12029	Internal Combustion Engines Lab	CO(MEE12029).1	2				1	1	1	1		1		1			3
		CO(MEE12029).2	2				1	1	1	1		1		1			3
		CO(MEE12029).3	2		3		1	1	1	1		1		1			3
		CO(MEE12029).4		3	3	2	1	1	1	1		1		1			3
		CO(MEE12029).5			3	2	1	1	1	1		1		1			3
		CO(MEE12029).6			3	2	1	1	1	1		1		1			3
		CO(MEE12029)	2	3	3	2	1	1	1	1		1		1			3

1=weakly mapped
2= moderately mapped
3=strongly mapped

MGT11402	Industrial Management	L	T	P	C
Version 1.0		3	0	0	3
Pre-requisites/Exposure	Basic Calculation Skill				
Co-requisites	--				

Course Objective:

1. To enable students to understand operational complexities of a business.
2. To enable students to conceptualize the process, functions and theories of management.
3. To enable students to provide knowledge about quality control processes.
4. To enable students to conceptualize different strategies relating to people management

Course Outcome: At the end of the course, the student will be able to:

CO 1	Understand the concepts related to Industrial Management.
CO 2	Demonstrate skills to perform Different Managerial Functions
CO 3	Define and analyze the importance of Quality control procedures.
CO 4	Illustrate different techniques to be used in Materials Management process
CO 5	Understand the concepts of production planning and implications of the same in industrial management processes.
CO 6	Evaluate importance of project management and its applications through PERT CPM method.

Course Description:

The purpose of this course is to provide an understanding of the theories and principles of modern management and encourage the course participants to make an appreciation of these principles in relation to their own experiences and selected managerial case studies.
The aims of the course is to understand the basic principles of management, and the four major functions of managers e.g. planning, organizing, leading and controlling and how managers actually operate. Students will be required to think critically and strategically about management theories and issues which will enable them to develop their decision-making and analytical skills. They will be involved in application exercises and case studies, which will assist them to develop graduate attributes.

Course Content:

Module 1: Introduction [6 Lecture Hours]

Industrial management - Introduction: Concept, Development, application and scope of Industrial Management. Productivity: Definition, measurement, productivity index, types of production system, Industrial Ownership.

Module 2: Managerial Functions [10 Lecture Hours]

Management Function: Principles of Management – Time and motion study, work simplification – process charts and flow diagrams, Production Planning. Inventory Control: Inventory, Cost, Deterministic Models, and Introduction to supply chain management.

Module 3: Quality Assurance [6 Lecture Hours]

Quality Control: Process control, SQC, Control charts, Single, Double and Sequential Sampling, Introduction to TQM.

Module 4: Materials Management [8 Lecture Hours]

Fundamentals of Materials Management; Material cycle; Forecasting; Material Classification-need and usage, Single and Multidimensional classifications; Materials Codification-Usage, Codification types;

Module 5: Production Planning [8 Lecture Hours]

Production Planning and Materials Requirements, Materials Procurement; Tendering; Types of Tenders, Storage and warehousing concepts, Receipt, Warehouse type, Layout, issue of materials and Updation of records; Manpower and equipment;

Module 6: Project Management [7Lecture Hours]

Project Management concept, Project Feasibility Studies, Project Identification, Market and Demand Analysis, Technical Analysis, Project Scheduling with PERT/CPM, Project Cost Estimate, Financial Appraisal of Single Project, Financial Appraisal of Multiple Projects, Project Cost Control (PERT/Cost).

Text Books:

1. Arnold, Chapman: Introduction to Materials Management: Pearson, 5th edition, 2008

Reference Books:

1) Gopal Krishnan & Sundarsan: Material Management: An Integrated Approach, Prentice Hall of India Private Limited, New Delhi, 2003
2) Industrial Engineering and Management by OP Khanna, DhanpatRai Publications, Delhi. Management Information Systems by Larry Long (Prentice Hall)
3) Industrial Management by VK Sharma, OP Harkut.

Modes of Evaluation: Quiz/Assignment/ presentation/ extempore/ Written Examination
Examination Scheme:

Components	Attendance	Internal Assessment	MTE	ETE
Weightage (%)	10	30	20	40

Relationship between the Course Outcomes (COs) and Program Outcomes (POs)

CO 1	Understand the concepts related to Industrial Management.	PO6, PO12, PSO1
CO 2	Demonstrate skills to perform Different Managerial Functions	PO6, PO12, PSO1

CO 3	Define and analyze the importance of Quality control procedures.	PO1, PO8, PO12, PSO1
CO 4	Illustrate different techniques to be used in Materials Management process	PO1, PO2, PO12, PSO1
CO 5	Understand the concepts of production planning and implications of the same in industrial management processes.	PO1, PO12, PSO1
CO 6	Evaluate importance of project management and its applications through PERT CPM method.	PO1, PO2, PO3, PO8, PO11, PSO1

		Engineering Knowledge	Problem analysis	Design/development of solutions	Conduct investigations of complex problems	Modern tool usage	The engineer and society	Environment and sustainability	Ethics	Individual and team work	Communication	Project management and finance	Life-long Learning	Plan the manufacturing of given mechanical components and systems using engineering analysis & design tools, process	Understand the dynamics of machine components and design components including power transmission, pressure vessels, IC	Determine the performance of thermal and fluid systems including IC engines, refrigeration and air-conditioning, and power
Course Code	Course Title	PO 1	PO 2	PO 3	PO 4	PO 5	PO 6	PO 7	PO 8	PO 9	PO 10	PO 11	PO 12	PS O1	PS O2	PS O3
MGT11402	Industrial Management	2	3	3			2		3	2	2	3	3	3		

1=weakly mapped,

2= moderately mapped,

3=strongly mapped

MEE11069	Automobile Engineering	L	T	P	C
Version 1.0		3	1	0	4
Pre-requisites/Exposure	KDM, Thermodynamics				
Co-requisites					

Course Objectives

The student will be made to learn

1. The anatomy of the automobile in general
2. The location and importance of each part
3. The functioning of the engine and its accessories, gear box, clutch, brakes, steering, axles and wheels Suspension, frame, springs and other connections
4. Emissions, ignition, controls, electrical systems and ventilation.

Course Outcomes:

On completion of this course, the students will be able to

1. Remember the basic knowledge about various vehicle frames, front axles and steering systems.
2. Understand the construction and working principle of final drives.
3. Examine different types of ignition and injection systems and their applications.
4. Explain rear axle and suspension system.
5. Review the various braking systems in automobiles.
6. Write about the various applications of automobiles

Catalogue Description

Automobile Engineering is a discipline of engineering which contracts with manufacturing, designing and operating automobiles. It is a branch of vehicle engineering which manages with buses, motorcycles, trucks, etc. It incorporates electrical, mechanical, software electronic, and safety elements.

Course Content

Module 1: Layout, Frame, Front Axle and Steering System (10 Lecture Hours)

Introduction: Types of chassis layout with reference to power plant locations and drive. Vehicle frames. Various types of frames. Constructional details. Materials. Testing of vehicles frames. Unitized frame body construction, Loads acting on vehicle frame. Front axle and Steering System: Types of front axle. Constructions details. Materials. Front wheel geometry viz. Castor, Camber, King pin inclination, Toe-in. Conditions for true rolling motion of wheels during steering. Steering geometry. Ackerman and Davis steering system. Constructional details of steering linkages. Different types of steering gear boxes. Steering linkages and layouts. Power and Power assisted steering. Steering of crawler tractors.

Module 2: Drive Line, Final Drive and Differential (8 Lecture Hours)

Drive Line: Effect of driving thrust and torque reactions. Hotch Kiss drive, torque tube drive and radius rods. Propeller shaft. Universal joints. Constants velocity universal joints. Front wheel drive. Final Drive Differential: Different types of final drive. Worm and worm wheel, Straight bevel gear, Spiral bevel gear and hypoid gear final drives. Double reduction and twin speed final drives. Differential principles. Construction details of differential unit. Non-slip differential. Differential locks. Differential housings.

Module 3: Ignition and Injection System (10 Lecture Hours)

Ignition Systems: Types, Construction & working of battery coil and magneto ignition systems. Relative merits, Centrifugal and vacuum advance mechanisms, types and construction of spark plugs, electronic ignition systems. Electronic Fuel Injection and Ignition Systems: Introduction, feedback carburettor systems. Throttle body injection and multi-port or point fuel injection., fuel injection systems, Injection system controls. Advantages of electronic ignition systems: Types of solid-state ignition systems and their principle of operation, Contact less electronic ignition system, and electronic spark timing control.Electronic Fuel Injection and Ignition Systems: Introduction, feedback carburettor systems. Throttle body injection and multi-port or point fuel injection, fuel injection systems, Injection system controls. Advantages of electronic ignition systems: Types of solid-state ignition systems and their principle of operation, Contact less electronic ignition system, and electronic spark timing control

Module 4:Suspension and Brake System (6 Lecture Hours)

Braking System: Classification of brakes, drum brake & disc brakes. Constructional Details-Theory of braking. Mechanical hydraulic and Pneumatic brakes. Servo brake. Power and power assisted brakes-different types of retarders like eddy current and hydraulic retarder. Anti-lock braking systems

Module 5: Introduction to Automotive Electronics (6 Lecture Hours)

Current trends in modern automobiles; Open and close loop Systems-Components for electronic engine management. Electronic management of chassis system. Vehicle motion control. Sensors and Actuators: Basic sensor arrangement, Types of sensors such As-Oxygen sensors, Crank angle position Sensors-Fuel metering/vehicle speed sensor and detonation Sensor-Altitude sensor, flow sensor. Throttle position sensors. Solenoids, stepper motors, and relays. Electronic Fuel Injection and Ignition Systems. Digital Engine Control System

Text Books:

1. Automobile Engineering Vol - I, Kirpal Singh, Standard Publishers, Delhi
2. Automobile Engineering Vol - II, Kirpal Singh, Standard Publishers, Delhi
3. Modern Electrical Equipment of Automobiles, Judge. A.W., Chapman & Hall, London
4. Automotive Computers and Control System, Tom Weather Jr and Cland C. Hunter Prentice Hall Inc., New Jersey.

Reference Books:

1. Automobile Mechanics, N.K.Giri, Khanna Publishers
2. Motor Vehicles, Newton and Steeds, ELBS
3. Automobile Engg., G.V.S Narang, Khanna Publication, New Delhi (1982)

Modes of Evaluation: Quiz/Assignment/ presentation/ extempore/ Written Examination Examination Scheme:

Components	Class Assessment	End Term
Weightage (%)	50	50

Relationship between the Course Outcomes (COs) and Program Outcomes (POs)

Course Code	Course Name	COs	PO 1	PO 2	PO 3	PO 4	PO 5	PO 6	PO 7	PO 8	PO 9	PO10	PO11	PO12	PSO 1	PSO 2	PSO 3
	Automobile	CO(MEE11069).1	2				1	1	1	1		1		1		3	

MEE11069	Engineering	CO(MEE11069).2	2				1	1	1	1		1		1		3	
		CO(MEE11069).3	2		3		1	1	1	1		1		1		3	
		CO (MEE11069).4		3	3	2	1	1	1	1		1		1		3	
		CO(MEE11069).5			3	2	1	1	1	1		1		1		3	
		CO(MEE11069).6			3	2	1	1	1	1		1		1		3	
		CO(MEE11069)	2	3	3	2	1	1	1	1		1		1		3	

1=weakly mapped
2= moderately mapped
3=strongly mapped

Name: **Enrolment No:**	ADAMAS UNIVERSITY PURSUE EXCELLENCE

Course: MEE11069 – Automobile Engineering

Program: B.Tech. **Semester: VII**

Time: 03 hrs. **Max. Marks: 40**

Instructions:

Attempt **Five Questions** compulsory from **Section A** (each carrying 1 marks); any **Three Questions** from **Section B** (each carrying 5 marks)**, any Two Questions** from **Section C** (each carrying 10 marks)**.**

SECTION A (Compulsory)

1.		**Knowledge Level**	**CO**
a)	The condition that causes vapour locking in a brake system is _____	**U**	**CO2**
b)	The motion of the cam is transferred to the valves through _____	**U**	**CO4**
c)	The function of an alternator in an automobile is to _____	**R**	**CO3**
d)	The torque available at the contact between driving wheels and road is known as _____	**R**	**CO1**
e)	The tilting of the front wheels away from the vertical, when viewed from the front of the car, is called _____	**U**	**CO5**

SECTION B (Answer any Three Questions)

2.	With a neat sketch explain the working principal of disk and drum brake.	**U**	**CO2**
3.	Describe the functions and operational principles of modern suspension systems.	**U**	**CO3**
4.	Explain oversteer and understeer criteria.	**R**	**CO1**
5.	What are the merits of fuel injection over carburetion in SI engines?	**U**	**CO5**

SECTION C (Answer any Two Questions)

8.	Identify the components and their functions of the front and rear suspension systems. Explain how changes in wheels and tires affect the suspension. Explain the basic operation of electronically controlled suspension systems.	**R**	**CO2**
9.	Write down the importance of Gusset Plate in frame and structure of automobiles? State the advantages of the separate body and frame construction.	**U**	**CO4**
10.	Explain double reduction final drive with a neat sketch. Discuss about constant velocity (CV) joints.	**U**	**CO3**

MEE11037	**Robotics**	L	T	P	C
Version 1.0		3	0	0	3
Pre-requisites/Exposure	Engineering Physics, Mechanics, Basic Electronics				
Co-requisites					

Course Objectives

1. Have successful professional and technical career
2. Have strong foundation in basic sciences, mathematics and computational platforms
3. Have knowledge on the theory and practices in the field and service of robotics Engineering and allied areas
4. Engross in life-long learning to keep themselves abreast of new developments
5. Practice and inspire high ethical values and technical standards

Course Outcomes

On completion of this course, the students will be able to

CO 1: Identify the application of mathematics, sciences and engineering in robotics
CO 2: Understand the electrical, electronic and mechanical components and use of them.
CO 3: Apply automatic manufacturing cells with robotic control.
CO 4: Analyze the electronic control system in metal machining and other manufacturing process.
CO5: Evaluate the features and operation of automation products.
CO 6: Adapt ethical and professional responsibilities

Catalog Description

This interdisciplinary course helps you design, implement and commercialise innovative systems and technologies. You will gain in-depth insight into top technologies of the digital industry, such as Digital Twin, automation or additive manufacturing. Students will become proficient in current topics such as robotics, extended reality or circular economy and get to strengthen your soft and hard skills thanks to our project and skills-based concept

Course Content

Module 1: Robot Kinematics and Dynamics

Types and components of a robot, Classification of robots, Kinematics systems; Definition of mechanisms and manipulators, Degrees of Freedom, Kinematic Modelling: Translation and Rotation Representation, Coordinate transformation, DH parameters, Forward and inverse kinematics, Jacobian, Singularity, and Statics, Dynamic Modelling: Forward and inverse dynamics, Equations of motion using Euler-Lagrange formulation, Newton Euler formulation

Module 2: Sensors

Contact and Proximity, Position, Velocity, Force, Tactile etc. Introduction to Cameras, Camera

calibration, Geometry of Image formation, Vision applications in robotics, Motion Sensors – Potentiometers, Resolver, Encoders – Optical, Magnetic, Inductive, Capacitive, LVDT – RVDT – Synchro – Microsyn, Accelerometer – GPS, Bluetooth, Range Sensors – RF beacons, Ultrasonic Ranging, Reflective beacons, Laser Range Sensor (LIDAR). Strain Gage, Load Cell, and Magnetic Sensors –types, principle, requirement and advantages: Magneto resistive – Hall Effect – Current sensor Heading Sensors – Compass, Gyroscope, Inclinometers.

Module 3: Robot Actuation Systems

Actuators: Electric, Hydraulic and Pneumatic, Transmission: Gears, Timing Belts and Bearings, Parameters for selection of actuators. Basics of control: open loop- closed loop, Transfer functions, and Control laws: P, PD, PID, Linear and Non-linear controls.

Module 4: Robotics in Industry 4.0

- Industry 4.0 and Technologies 1
- Industry 4.0: Design Principles
- Industry 4.0 and Technologies 2
- Building Blocks of Industry 4.0: Cyber Physical Systems 2
- Building Blocks of Industry 4.0: Cyber Physical Systems 1
- Aligning Industry 4.0 and Strategies. Advanced Manufacturing Process Analysis
- Data storage and data security
- Industry 4.0 and the national high technology strategies

Text Books/ Reference Books:

T1: Eldra Pearl Solomon 2015, Introduction to Human Anatomy and Physiology, 4th Ed., Elsevier Health Sciences

T2: Susan Hall 2014, Basic Biomechanics, McGraw-Hill Education.

T3: C. Mauli Agrawal et al. 2014, Introduction to Biomaterials, Cambridge, UK; Cambridge University Press.

T4: Gail Baura 2012, Medical Device Technologies: A Systems Based Overview Using Engineering Standards, 1st Ed., Academic Press

T5: Gail Baura 2012, Medical Device Technologies: A Systems Based Overview Using Engineering Standards, 1st Ed., Academic Press

R1: Duane Knudson 2007, Fundamentals of Biomechanics, Springer Science & Business Media

R2: M.B. Weinger, M.E. Wiklund 2011, Handbook of Human Factors in Medical Device Design

Effective and optimized design, Revolutionizing Quality Control, Smart maintenance, Human-robot collaboration, Adapting to an ever-changing market.

Text Books:

1: Konar, A. (2005), Computational Intelligence: Principles, Techniques and Applications, Springer.
2: Saravanan, R. (2006), Manufacturing Optimization through Intelligent Techniques, CRC Press
3: Bishop, C.M. (2006), Pattern Recognition and Machine Learning, 1st ed., Springer.

Reference Books:

1: Wang, J. and A. Kusiak (2000), Computational Intelligence in Manufacturing Handbook, CRC Press.
2: Gen, M. and R. Cheng (1999), Genetic Algorithms and Engineering Optimization, Wiley Interscience.
3: Hopp, W. and M. Spearman (2001), Factory physics, 2nd ed., Mc-GrawHill Publisher.

Modes of Evaluation: Quiz/Assignment/ presentation/ extempore/ Written Examination
Examination Scheme:

Components	Class Assessment	End Term
Weightage (%)	50	50

Relationship between the Course Outcomes (COs) and Program Outcomes (POs)

Course Code	Course Name	COs	PO 1	PO 2	PO 3	PO 4	PO 5	PO 6	PO 7	PO 8	PO 9	PO 10	PO 11	PO 12	PSO 1	PSO 2	PSO 3
MEE11037	Robotics	CO(MEE11037).1	2				1	1	1	1		1		1		3	
		CO(MEE11037).2	2				1	1	1	1		1		1		3	
		CO(MEE11037).3	2		3		1	1	1	1		1		1		3	
		CO(MEE11037).4		3	3	2	1	1	1	1		1		1		3	
		CO(MEE11037).5			3	2	1	1	1	1		1		1		3	
		CO(MEE11037).6			3	2	1	1	1	1		1		1		3	
		CO(MEE11037)	2	3	3	2	1	1	1	1		1		1		3	

1=weakly mapped,
2= moderately mapped,
3=strongly mapped

MEE11040	Biomedical Design	L	T	P	C
Version 1.0		3	0	0	3
Pre-requisites/Exposure	Mechanics of Materials, Design of Machine Elements				
Co-requisites					

Course Objectives

1. To explain CAD design process as applied to Biomedical Design

2. To discuss various challenges in biomedical design and accessibility from customization perspective

Course Outcomes

On completion of this course, the students will be able to

CO1. Identify Biomedical design technology and its appropriate uses and limitations.

CO2. Understand knowledge and skills in workflow for 3D biomodelling Processes

CO3. Choose biomaterials and their appropriate functionality

CO4. Explain Medical device design

CO5. Evaluate mathematical and computational principles to address biomedical design problems.
CO6. Write the various applications of Biomedical design

Catalog Description

Biomedical Design integrate the knowledge core of traditional engineering disciplines and modern biology to solve problems encountered in living systems. Living systems present a number of conceptual and technological problems not encountered in physical systems. Biomedical design allow engineers to analyze a problem from both an engineering and biological perspective; to anticipate the special difficulties in working with living systems and to evaluate a wide range of possible approaches to solutions.

Course Content

Module 1: Introduction to Human Anatomy

Descriptions of Skeletal system, Muscular system, Cardiovascular system, Respiratory system, Sense organs.

Module 2: Basics of Biomechanics

What Is Biomechanics? Linear Kinematics and Kinetics of Human Movement, Angular Kinematics and Kinetics of Human Movement.

Module 3: Biomaterials

Impact of biomaterials, Metals, Natural Biomaterials, Bioceramics, Bioploymers, Biocomposites, Clinical Application Case Study.

Module 4: Medical Device Design

Clinical need identification, Issues of patient and operator safety.

Physiology, key features and relevant standards of Electrocardiographs, Pacemakers, Mechanical ventilators, Blood pressure monitors, Hemodialysis delivery system.

Module 5: Biomodelling and Analysis

Modelling approaches. Case study: Musculoskeletal system, Cardiovascular system.

Text Books/ Reference Books:

T1: Eldra Pearl Solomon 2015, Introduction to Human Anatomy and Physiology, 4th Ed., Elsevier Health Sciences

T2: Susan Hall 2014, Basic Biomechanics, McGraw-Hill Education.

T3: C. Mauli Agrawal et al. 2014, Introduction to Biomaterials, Cambridge, UK; Cambridge University Press.

T4: Gail Baura 2012, Medical Device Technologies: A Systems Based Overview Using Engineering Standards, 1st Ed., Academic Press

T5: Gail Baura 2012, Medical Device Technologies: A Systems Based Overview Using Engineering Standards, 1st Ed., Academic Press

R1: Duane Knudson 2007, Fundamentals of Biomechanics, Springer Science & Business Media

R2: M.B. Weinger, M.E. Wiklund 2011, Handbook of Human Factors in Medical Device Design

Effective and optimized design, Revolutionizing Quality Control, Smart maintenance, Human-robot collaboration, Adapting to an ever-changing market.

Text Books:

1: Konar, A. (2005), Computational Intelligence: Principles, Techniques and Applications, Springer.
2: Saravanan, R. (2006), Manufacturing Optimization through Intelligent Techniques, CRC Press
3: Bishop, C.M. (2006), Pattern Recognition and Machine Learning, 1st ed., Springer.

Reference Books:

1: Wang, J. and A. Kusiak (2000), Computational Intelligence in Manufacturing Handbook, CRC Press.
2: Gen, M. and R. Cheng (1999), Genetic Algorithms and Engineering Optimization, Wiley Interscience.
3: Hopp, W. and M. Spearman (2001), Factory physics, 2nd ed., Mc-GrawHill Publisher.

Modes of Evaluation: Quiz/Assignment/ presentation/ extempore/ Written Examination
Examination Scheme:

Components	Class Assessment	End Term
Weightage (%)	50	50

Relationship between the Course Outcomes (COs) and Program Outcomes (POs)

Course Code	Course Name	COs	PO 1	PO 2	PO 3	PO 4	PO 5	PO 6	PO 7	PO 8	PO 9	PO10	PO11	PO12	PSO1	PSO2	PSO3
MEE11040	Biomedical Design	CO(MEE11040).1	2				1	1	1	1		1		1		3	
		CO(MEE11040).2	2				1	1	1	1		1		1		3	
		CO(MEE11040).3	2		3		1	1	1	1		1		1		3	
		CO(MEE11040).4		3	3	2	1	1	1	1		1		1		3	
		CO(MEE11040).5			3	2	1	1	1	1		1		1		3	
		CO(MEE11040).6			3	2	1	1	1	1		1		1		3	
		CO(MEE11040)	2	3	3	2	1	1	1	1		1		1		3	

1=weakly mapped,
2= moderately mapped,
3=strongly mapped

MEE12055	Computational Fluid Dynamics Lab	L	T	P	C
Version 1.0		0	0	2	1
Pre-requisites/Exposure	Higher Engineering Mathematics, heat transfer and Fluid Mechanics at UG level				
Co-requisites					

Course Objectives

1. To mould students to become a professional with all necessary skills, personality and sound knowledge in basic and advance technological areas.
2. To promote understanding of concepts and develop ability in design manufacture and maintenance of aircraft, aerospace vehicles and associated equipment and develop application capability of the concepts sciences to engineering design and processes.
3. Understanding the current scenario in the field of mechanical and acquire ability to apply knowledge of engineering, science and mathematics to design and conduct experiments in the field of Mechanical Engineering.
4. To develop leadership skills in our students necessary to shape the social, intellectual, business and technical worlds.

Course Outcomes

On completion of this course, the students will be able to

CO1. Identify major theories, approaches and methodologies used in CFD.

CO2. Express Fluid Dynamic problems with differential equations

CO3. Apply the elementary knowledge of finite elements method for flow and heat transfer problems.

CO4. Analyze numerically major engineering design problems involving fluid flow and heat transfer.
CO5. Evaluate numerically major engineering design problems involving fluid flow and heat transfer.

CO6. Simulate CFD methods (e.g. boundary conditions.) in actual engineering using commercial CFD codes.

Catalogue Description

This course aims to introduce numerical modelling and its role in automotive field; it will enable the students to understand the various discretisation methods and solving methodologies and to create confidence to solve complex problems in the automotive field with the knowledge of Heat transfer and fluid dynamics. Further students can able to develop finite difference and finite volume discretized forms of the CFD equations and to formulate explicit & implicit algorithms for solving the Euler Equations & Navier Stokes Equations.

Course Content

List of Experiments
1. Perform Numerical analysis on flow through pipe. 2. Perform Numerical analysis on flat plate boundary layer. 3. Perform Numerical analysis on compressible flow in nozzle. 4. Perform Numerical analysis on convective heat transfer. 5. Perform Numerical analysis on steady flow past a cylinder. 6. Perform Numerical analysis on unsteady flow past a cylinder. 7. Perform Numerical analysis on flow over an airfoil. 8. Perform Numerical analysis on heat conduction through wall.

Text Books:

1. Computational Fluid Dynamics the Basics with Applications, John D Anderson, Jr., McGraw Hill Book Company.
2. An Introduction to Computational Fluid Dynamics: The Finite Volume Method, H K Versteeg, W Malalasekera, Pearson Education Ltd.
3. Introduction to Computational Fluid Dynamics, Anil W Date, Cambridge University Press.

Reference Books:

1. Computational Fluid Dynamics: A Practical Approach, JiyuanTu, Guan HengYeoh, Chaoqun Liu, Elsevier.
2. Principles of Computational Fluid dynamics, Pieter Wesseling, Springer International Edition
3. Fundamentals of Computational Fluid Dynamics, Tapan K. Sengupta, Universities Press.

Modes of Evaluation: Quiz/Assignment/ presentation/ extempore/ Written Examination
Examination Scheme:

Components	Class Assessment	End Term
Weightage (%)	50	50

Relationship between the Course Outcomes (COs) and Program Outcomes (POs)

Course Code	Course Name	COs	PO 1	PO 2	PO 3	PO 4	PO 5	PO 6	PO 7	PO 8	PO 9	PO 10	PO 11	PO 12	PS O1	PS O2	PS O3
MEE12055	Computational Fluid Dynamics Lab	CO(MEE12055).1	2				1	1	1	1		1		1			3
		CO(MEE12055).2	2				1	1	1	1		1		1			3
		CO(MEE12055).3	2		3		1	1	1	1		1		1			3
		CO(MEE12055).4		3	3	2	1	1	1	1		1		1			3
		CO(MEE12055).5			3	2	1	1	1	1		1		1			3
		CO(MEE12055).6			3	2	1	1	1	1		1		1			3
		CO(MEE12055)	2	3	3	2	1	1	1	1		1		1			3

1=weakly mapped

2= moderately mapped
3=strongly mapped

MEE_____	**Data Science & AI Laboratory**	L	T	P	C
Version 1.0		0	0	2	1
Pre-requisites/Exposure	Higher Engineering Mathematics, Introduction to Programming				
Co-requisites					

Course Objectives

1. To provide students with practical knowledge and hands-on experience in the application of Data Science and Artificial Intelligence (AI) techniques.
2. To develop the ability to work with real-world data, clean and preprocess it, and apply machine learning algorithms.
3. To explore various AI applications and tools, including supervised and unsupervised learning, neural networks, and deep learning techniques.
4. To help students integrate the concepts learned in the classroom into practical solutions for data-driven decision-making

Course Outcomes

On completion of this course, the students will be able to

1. Install and configure essential Python libraries (NumPy, Pandas, Matplotlib, Scikit-learn, TensorFlow) for data science and AI tasks.
2. Work with essential data structures like lists, arrays, and dataframes.
3. Perform operations such as indexing, slicing, and aggregation on data.
4. Demonstrate a solid understanding of data manipulation, cleaning, and visualization techniques using Python.
5. Evaluate classification models using metrics such as accuracy, confusion matrix, precision, recall, and F1-score.

Catalogue Description

The Data Science & AI Lab is designed to provide students with hands-on experience in implementing machine learning algorithms, data preprocessing, model evaluation, and optimization. Students will also explore the use of popular data science and AI frameworks such as Python (NumPy, Pandas, Scikit-learn, TensorFlow, Keras), and work with real-world datasets.

Course Content

List of Experiments
1. Perform Setting up Python and necessary libraries (NumPy, Pandas, Matplotlib, Seaborn)
2. Introduction to basic data structures and operations in Python
3. Building a simple linear regression model from scratch
4. Implementing logistic regression and k-Nearest Neighbors (k-NN) for classification tasks
5. Evaluating models using accuracy, confusion matrix, precision, recall, and F1-score
6. Building decision tree classifiers and random forest models

	Vibration & Control Lab	L	T	P	C
Version 1.0		3	0	0	3
Pre-requisites/Exposure	Engineering Mechanics, Engineering Mathematics, Mechanisms and Machines				
Co-requisites	Mechanical Vibration and Control				

Course Objectives

• To interpret the behaviour of vibrating systems through an understanding of basic principles and the role of mass, stiffness and damping.

• To undertake measurement of vibration quantities and measure modes of vibration on a simple structure

• To develop and equations of motion for free and forced vibration of Mechanical systems.

Course Outcomes

On completion of this course, the students will be able to

CO1. Understand undamped & damped free vibrations, and forced vibrations of single DoF systems

CO2. Estimate the undamped & damped free vibrations, and forced vibrations of single DoF systems

CO3. Determine the requirements of various vibration measuring instruments for response analysis.

CO4. Analyze continuous systems for their amplitude of vibration and mode shapes for common boundary conditions

CO5. Review various passive and active vibration control techniques

CO6. Simulate the second-order single DoF vibrating systems

Catalogue Description

This course is intended for all those who want to understand vibration, its control, and its management. Thus, the course is open to students of engineering and science, and also to all those who from the industry and research organizations.

Course Content

List of Experiments

1. Study of a beat phenomenon of a coupled pendulum
2. Determination of effective radius of gyration of an irregular body through torsional oscillation of trifilar suspension
3. Determinations of natural frequencies of beams under simply supported and cantilever boundary conditions
4. Study of dynamic vibration absorber
5. DC motor speed control with various sensors
6. Measurement of linear displacement by potentiometer
7. Speed torque characteristics of DC servomotor
8. Balancing of ball and beam system through PID control
9. Active vibration control

Modes of Evaluation: Quiz/Assignment/ presentation/ extempore/ Written Examination

Examination Scheme:

Components	**Class Assessment**	**End Term**
Weightage (%)	**50**	**50**

Relationship between the Course Outcomes (COs) and Program Outcomes (POs)

Course Code	Course Name	COs	PO1	PO2	PO3	PO4	PO5	PO6	PO7	PO8	PO9	PO10	PO11	PO12	PSO1	PSO2	PSO3
	Vibration & Control	CO().1	2				1	1	1	1		1		1		3	
		CO().2	2				1	1	1	1		1		1		3	
		CO().3	2		3		1	1	1	1		1		1		3	
		CO().4		3	3	2	1	1	1	1		1		1		3	
		CO().5			3	2	1	1	1	1		1		1		3	
		CO().6			3	2	1	1	1	1		1		1		3	
		CO()	2	3	3	2	1	1	1	1		1		1		3	

1=weakly mapped

2= moderately mapped

3=strongly mapped

MEE14056	Summer Internship	L	T	P	C
Version 1.0		0	0	4	2
Pre-requisites/Exposure	Basic science, Engineering science, Core and Elective courses				
Co-requisites	Core and Elective courses				

Course Objectives:

1. To explain the operation of the industrial facility in which the student worked
2. To understand problem solving by analyzing modern tools and devices
3. To apply existing engineering knowledge in similar or new situations
4. To identify when new engineering knowledge is required
5. To understand lifelong learning processes through critical reflection of internship experiences

Course Outcomes:

On completion of this course, the students will be able to

CO1. Find the operation of the industrial facility in which the student worked
CO2. Understand problem solving by analyzing modern tools and devices
CO3. Apply existing engineering knowledge in similar or new situations
CO4. Question when new engineering knowledge is required
CO5. Assess lifelong learning processes through critical reflection of internship experiences
CO6. Collaborate with the industry

Catalogue Description:

The course involves compulsory training in an industrial environment for a specified duration. The course offers to connect the theoretical aspects and the laboratory scale learning with the industrial practices. Performance of the students is evaluated based on his/her submission of a certificate from the training organization followed by a seminar/viva-voce and report submission.

Modes of Evaluation: Quiz/Assignment/ presentation/ extempore/ Written Examination
Examination Scheme:

Components	Class Assessment	End Term
Weightage (%)	50	50

Relationship between the Course Outcomes (COs) and Program Outcomes (POs):

Course Code	Course Name	COs	PO 1	PO 2	PO 3	PO 4	PO 5	PO 6	PO 7	PO 8	PO 9	PO10	PO11	PO12	PSO1	PSO2	PSO3
MEE14056	Summer Internship	CO(MEE14056).1	2	2									2	3	3	3	3
		CO(MEE14056).2		2	2	2							2	3	3	3	3
		CO(MEE14056).3		2	2	2							2	3	3	3	3
		CO(MEE14056).4			2	2	2	2	2				2	3	3	3	3
		CO(MEE14056).5			2	2	2	2	2				2	3	3	3	3
		CO(MEE14056).6	2	2	2	2	2	2	2	2	2	2	2	3	3	3	3
		CO(MEE14056)	2	3	3	3	2	2	2	2	2	2	2	3	3	3	3

1=weakly mapped,
2= moderately mapped,
3=strongly mapped

MEE14057	Minor Project	L	T	P	C
Version 1.0		0	0	6	3
Pre-requisites/Exposure	Basic science, Engineering science, Core and Elective courses				
Co-requisites	Core and Elective courses				

Course Objectives:

1. To develop the understanding to provide technical solutions with an innovative approach
2. To develop confidence to take up a project activity independently
3. To be able to utilise technical knowledge to create small scale prototypes

Course Outcomes:

On completion of this course, the students will be able to

CO1. Identify the complex engineering problems
CO2. Understand the complex engineering problems
CO3. Apply the technical knowledge of the program to solve the complex engineering problems
CO4. Analyze the solutions to the complex engineering problems
CO5. Review the solutions of the complex engineering problems
CO6. Create the product

Catalogue Description:

The course encourages students to take project works that are based on current trends and technologies in various subjects, which will augment the theory subjects. The students will form a group to do their project work. This teaming is to encourage team spirit and to insist the importance of team work. The students typically undergo group formation, finalization of area of work, testing, generation and verification of results, and possible research publication procedure.

Modes of Evaluation: Quiz/Assignment/ presentation/ extempore/ Written Examination
Examination Scheme:

Components	Class Assessment	End Term
Weightage (%)	50	50

Relationship between the Course Outcomes (COs) and Program Outcomes (POs)

Course Code	Course Name	COs	PO 1	PO 2	PO 3	PO 4	PO 5	PO 6	PO 7	PO 8	PO 9	PO 10	PO 11	PO 12	PSO 1	PSO 2	PSO 3
MEE14057	Minor Project	CO(MEE14057).1	2	2									2	3	3	3	3
		CO(MEE14057).2		2	2	2							2	3	3	3	3
		CO(MEE14057).3		2	2	2							2	3	3	3	3
		CO(MEE14057).4			2	2	2	2	2				2	3	3	3	3
		CO(MEE14057).5			2	2	2	2	2				2	3	3	3	3
		CO(MEE14057).6	2	2	2	2	2	2	2	2	2	2	2	3	3	3	3

		CO(MEE14057)	2	3	3	3	2	2	2	2	2	2	2	3	3	3	3

1=weakly mapped,
2= moderately mapped,
3=strongly mapped

MEE14060	Industry Work Experience/ SIRE/ Major Project	L	T	P	C
Version 1.0		0	0	12	6
Pre-requisites/Exposure	Basic science, Engineering science, Core and Elective courses, Summer Internship				
Co-requisites	Core and Elective courses				

Course Objectives:

1. To be able to cconnect academic studies to learning outside the classroom
2. To recognize crucial knowledge, skills and personal attributes that employers look for
3. To apply communication, team-working and problem solving skills
4. To apply networking skills
5. To be able to identify future educational and career goals

Course Outcomes:

On completion of this course, the students will be able to

CO1. Identify the complex engineering problems
CO2. Understand the complex engineering problems
CO3. Apply the technical knowledge of the program to solve the complex engineering problems
CO4. Analyze the solutions to the complex engineering problems
CO5. Review the solutions of the complex engineering problems
CO6. Create the product

Catalogue Description:

The full semester course is an important contribution to the attainment of key capabilities that each engineering student should have at graduation, to be prepared for the world of work and create the best chances for a successful career, such as employability, organisational sensitivity, intercultural communication, ethical accountability, professional responsibility and lifelong learning. Students are expected to perform under the professional mentorship in an industry environment. The course includes assignments and assessments with feedback from the company as well as from the students, with the aim to have real impact on student development.
.

Modes of Evaluation: Quiz/Assignment/ presentation/ extempore/ Written Examination
Examination Scheme:

Components	Class Assessment	End Term
Weightage (%)	50	50

Relationship between the Course Outcomes (COs) and Program Outcomes (POs)

Course Code	Course Name	COs	PO 1	PO 2	PO 3	PO 4	PO 5	PO 6	PO 7	PO 8	PO 9	PO10	PO11	PO12	PSO 1	PSO 2	PSO 3
MEE14060	Industry Work Experience / SIRE* / Major Project	CO(MEE14060).1	2	2									2	3	3	3	3

		CO(MEE14060).2		2	2	2							2	3	3	3	3
		CO(MEE14060).3		2	2	2							2	3	3	3	3
		CO(MEE14060).4			2	2	2	2	2				2	3	3	3	3
		CO(MEE14060).5			2	2	2	2	2				2	3	3	3	3
		CO(MEE14060).6	2	2	2	2	2	2	2	2	2	2	2	3	3	3	3
		CO(MEE1406)	2	3	3	3	2	2	2	2	2	2	2	3	3	3	3

1=weakly mapped,
2= moderately mapped,
3=strongly mapped

MEE15061	Comprehensive Viva-voce	L	T	P	C
Version 1.0		0	0	0	2
Pre-requisites/Exposure	Basic science, Engineering science, Core and Elective courses				
Co-requisites	Core Courses				

Course Objectives:

1. To aappreciate importance of fundamental knowledge and its application
2. To ccommunicate with larger audience on core technical matter and newer ideas

Course Outcomes:

On completion of this course, the students will be able to

CO1. Appreciate importance of fundamental knowledge and its application

CO2. Communicate with larger audience on core technical matter and newer ideas

Catalogue Description:

The course tests the technical knowledge acquired during the study, spoken skills, and the ability to think logically under time pressure. The course proves extremely useful for placement interviews.

Modes of Evaluation: Quiz/Assignment/ presentation/ extempore/ Written Examination

Examination Scheme:

Components	Attendance	Internal Assessment	MTE	ETE
Weightage (%)	10	30	20	40

Relationship between the Course Outcomes (COs) and Program Outcomes (POs):

Mapping between COs and POs		
	Course Outcomes (COs)	Mapped Program Outcomes
CO1	Appreciate importance of fundamental knowledge and its application	PO1, PO2, PO3, PO10, PO12, PSO1-PSO3
CO2	Communicate with larger audience on core technical matter and newer ideas	

		Engineering Knowledge	Problem analysis	Design/development of solutions	Conduct investigations of complex problems	Modern tool usage	The engineer and society	Environment and sustainability	Ethics	Individual or team work	Communication	Project management and finance	Life-long Learning	Plan the manufacturing of given mechanical components and systems using engineering analysis & design tools, process planning and modern	Understand the dynamics of machine components and design components including power transmission, pressure vessels, IC engine components	Determine the performance of thermal and fluid systems including IC engines, refrigeration and air-conditioning, and power generating systems
Course Code	Course Title	PO1	PO2	PO3	PO4	PO5	PO6	PO7	PO8	PO9	PO10	PO11	PO12	PSO1	PSO2	PSO3
MEE15061	Comp. Viva Voce	3	3	3							3		3	3	3	3

1=weakly mapped,

2= moderately mapped,

3=strongly mapped

	Micro Electromechanical Systems (MEMS)	L	T	P	C
Version 1.0		0	0	0	2
Pre-requisites/Exposure	Basic science, Engineering science				
Co-requisites					

Course Objectives:

1. To understand the concept of smart materials and smart structures
2. To develop familiarity with piezoelectric materials and their use as sensors and actuators in various configurations
4. To obtain knowledge of various other smart materials/structures with application examples
5. To read and understand emerging technical literature about the subject

Course Outcomes:

On completion of this course, the students will be able to

7. Tabulate the characteristics of materials such as Metals, Polymers and Ceramics.
8. Categorize materials for sensor applications based on required properties.
9. Determine the properties of shape memory alloys with other class of materials and propose its suitability for a range of applications.
10. Analyze the properties of smart structures, MEMS, with the applications and select suitable procedure for fabrication.
11. Review the methods and uses of Micro fabrications, Biomimetics, types of polymers used in MEMS, Fibre optics, piezoelectric sensing and actuation.
12. Write a detailed report on applications of smart materials

Catalogue Description:

Smart Structures and Intelligent System are becoming an integral part of new aerospace and automobile systems due to high performance and fast response potential. Knowledge in this field is multi-disciplinary in nature involving materials, composites, basic electronics, control system and informatics. In different applications, materials experience a variety of environment like heat, stress, moisture, chemicals, radiation, etc, and thus it is imperative to study the behaviour of a material when exposed to these environments. Students will be expected to develop a basic understanding of different types of smart materials and systems materials along with their structures and properties.

Course Content

Module 1: 8 lecture hours

Introduction to Smart Materials

Characteristics of composites and ceramics materials, Dynamics and controls, concepts, Electro-magnetic materials and shape memory alloys-processing and characteristics. Applications of Smart structures. Shape memory Effect-Application, Processing and characteristics.

Module 2: 8 lecture hours

Sensing and Actuation

Principles of electromagnetic, acoustics, chemical and mechanical sensing and actuation, Types of sensors and their applications, their compatibility writer conventional and advanced materials, signal processing, principles and characterization.

Module 3: 8 lecture hours

Design principle of smart Materials

Design of shape memory alloys, Types of MR fluids, Characteristics and application, principles of MR fluid value designs, Magnetic circuit design, MR Dampers, Design issues.

Optics: Principles of optical fibre technology, characteristics of active and adaptive optical system and components, design and manufacturing principles.

Module 4: 8 lecture hours

Control design

Principles of drag and turbulence control through smart skins, applications in environment such as aerospace and transportation vehicles, manufacturing, repair and maintainability aspects. Principles of structural acoustic control, distributed, analog and digital feedback controls, Dimensional implications for structural control.

Module 5: 8 lecture hours

Information Processing

PZT Actuators, MEMS, Magnetic shape Memory Alloys, Characteristics and Applications. Neural Network, Data Processing, Data Visualization and Reliability – Principles and Application domains

Text Books

1. "Smart Materials and Structures", M.V. Gandhi and B.S. Thompson, Springer Chapmen & Hall publishing company, 1st Edition, 1992.

2. "Smart Structures –Analysis and Design", A.V.Srinivasan and D Michel, Cambridge University Press, 2nd Edition, 2001.

Reference Books

1. "Smart Materials" Mel Schwartz, CRC Press, 1st Edition, 2009.
2. "Smart Material and New Technologies" Michelle Addington and Daniel Schodek, Elsevier-Architectural Press, 1st edition, 2005.
3. "Smart Materials and Structures: New Research", Peter L. Reece, Nova Science Publisher, 1st Edition, 2007.
4. "Materials that Change Color: Smart Materials, Intelligent Design", Marinella Ferrara and Murat Bengisu, Springer, 1st Edition, 2014.

Modes of Evaluation: Quiz/Assignment/ presentation/ extempore/ Written Examination
Examination Scheme:

Components	Class Assessment	End Term
Weightage (%)	50	50

Relationship between the Course Outcomes (COs) and Program Outcomes (POs)

Course Code	Course Name	COs	PO1	PO2	PO3	PO4	PO5	PO6	PO7	PO8	PO9	PO10	PO11	PO12	PSO1	PSO2	PSO3

	ME MS	CO( ).1	2				1	1	1	1		1		1		3	
		CO( ).2	2				1	1	1	1		1		1		3	
		CO( ).3	2		3		1	1	1	1		1		1		3	
		CO( ).4		3	3	2	1	1	1	1		1		1		3	
		CO( ).5			3	2	1	1	1	1		1		1		3	
		CO( ).6			3	2	1	1	1	1		1		1		3	
		CO( )	2	3	3	2	1	1	1	1		1		1		3	

1=weakly mapped
2= moderately mapped
3=strongly mapped

CO-PO & PSO Mapping

Name of the Program- B Tech in Mechanical Engineering (Regular)

Department of Mechanical Engineering

Course Outcome-Program Outcome mapping table for B.Tech. ME AY2024-25

Course Code	Course Name	COs	PO1	PO2	PO3	PO4	PO5	PO6	PO7	PO8	PO9	PO10	PO11	PO12	PSO1	PSO2	PSO3
MTH 11501	Engineering Mathematics-I	CO(MTH 11501).1	3	2	-	-	2	-	-	-	-	-	-	-	-	-	-
		CO(MTH 11501).2	3	2	-	-	2	-	-	-	-	-	-	-	-	-	-
		CO(MTH 11501).3	3	2	-	-	2	-	-	-	-	-	-	-	-	-	-
		CO(MTH 11501).4	3	2	-	-	2	-	-	-	-	-	-	-	-	-	-
		CO(MTH 11501).5	3	2	-	-	2	-	-	-	-	-	-	-	-	-	-
		CO(MTH 11501).6	3	2	-	-	2	-	-	-	-	-	-	-	-	-	-
		CO(MTH 11501)	3	2	-	-	2	-	-	-	-	-	-	-	-	-	-

Course Code	Course Name	COs	PO1	PO2	PO3	PO4	PO5	PO6	PO7	PO8	PO9	PO10	PO11	PO12	PSO1	PSO2	PSO3
PHY13201	Applied Science	CO(PHY 13201).1	3	1	-	-	-	-	-	-	-	-	-	1	-	-	-
		CO(PHY 13201).2	3	-	-	-	-	-	-	-	-	-	-	1	-	-	-
		CO(PHY 13201).3	3	3	-	-	-	-	-	-	-	-	-	1	-	-	-
		CO(PHY 13201).4	-	-	-	-	-	-	-	-	-	-	-	-	-	-	-
		CO(PHY 13201).5	3	2	-	-	-	-	-	-	-	-	-	1	-	-	-
		CO(PHY 13201).6	3	2	-	-	-	-	-	-	-	-	-	1	-	-	-
		CO(PHY 13201)	3	2	-	-	-	-	-	-	-	-	-	1	-	-	-

Course Code	Course Name	COs	PO1	PO2	PO3	PO4	PO5	PO6	PO7	PO8	PO9	PO10	PO11	PO12	PSO1	PSO2	PSO3

EVS11112	Environmental Science	CO(EVS11112).1	-	2	2	-	-	2	-	-	-	-	-	-	-	-	-
		CO(EVS11112).2	2	-	3	-	-	3	1	-	-	-	-	-	-	-	-
		CO(EVS11112).3	-	3	-	-	-	1	3	-	-	-	1	-	-	-	-
		CO(EVS11112).4	1	-	1	-	-	1	3	-	-	-	-	-	-	-	-
		CO(EVS11112).5	2	-	3	-	-	3	1	-	-	-	-	-	-	-	-
		CO(EVS11112).6	1	-	1	-	-	1	3	-	-	-	-	-	-	-	-
		CO(EVS11112)	2	3	3	-	-	3	3	-	-	-	1	-	-	-	-

Course Code	Course Name	COs	PO1	PO2	PO3	PO4	PO5	PO6	PO7	PO8	PO9	PO10	PO11	PO12	PSO1	PSO2	PSO3
CSE11001	Introduction to Programming	CO(CSE11001).1	3	2	2		1						1				
		CO(CSE11001).2	3	2	2		1						1				
		CO(CSE11001).3	3	2	2		1						1				
		CO(CSE11001).4	3	2	2		1						1				
		CO(CSE11001).5	3	2	2		1						1				
		CO(CSE11001).6	3	2	2		1						1				
		CO(CSE11001)	3	2	2		1						1				

Course Code	Course Name	COs	PO1	PO2	PO3	PO4	PO5	PO6	PO7	PO8	PO9	PO10	PO11	PO12	PSO1	PSO2	PSO3
GEE11001	Electrical and Electronics Technology	CO(GEE11001).1	3	3	2	1	1							1			
		CO(GEE11001).2	3	3	2	1	1							1			
		CO(GEE11001).3	3	3	2	1	1							1			
		CO(GEE11001).4	3	3	2	1	1							1			
		CO(GEE11001).5	3	3	2	1	1							1			
		CO(GEE11001).6	3	3	2	1	1							1			
		CO(GEE11001)	3	3	2	1	1							1			

Course Code	Course Name	COs	PO1	PO2	PO3	PO4	PO5	PO6	PO7	PO8	PO9	PO10	PO11	PO12	PSO1	PSO2	PSO3
ENG11053	English Communication	CO(ENG11053).1	-	-	-	-	-	-	-	-	-	3	-	-	-	-	-
		CO(ENG11053).2	-	-	-	-	-	-	-	-	-	3	-	3	-	-	-
		CO(ENG11053).3	-	-	-	-	-	-	-	-	-	3	-	-	-	-	-
		CO(ENG11053).4	-	-	-	-	-	-	-	-	-	3	-	-	-	-	-
		CO(ENG11053).5	-	-	-	-	-	-	-	-	-	3	-	-	-	-	-
		CO(ENG11053).6	-	-	-	-	-	-	-	-	-	3	-	3	-	-	-
		CO(ENG11053)	-	-	-	-	-	-	-	-	-	3	-	3	-	-	-

Course Code	Course Name	COs	PO1	PO2	PO3	PO4	PO5	PO6	PO7	PO8	PO9	PO10	PO11	PO12	PSO1	PSO2	PSO3
GEE11012	Disruptive Technology Innovations	CO(GEE11012).1	-	-	-	-	-	3	-	-	-	-	-	3	-	-	-
		CO(GEE11012).2	-	-	-	-	-	3	-	-	-	-	-	3	-	-	-
		CO(GEE11012).3	-	-	-	-	-	3	-	-	-	-	-	3	-	-	-
		CO(GEE11012).4	-	-	-	-	-	3	-	-	-	-	-	3	-	-	-
		CO(GEE11012).5	-	-	-	-	-	3	-	-	-	-	-	3	-	-	-
		CO(GEE11012).6	-	-	-	-	-	3	-	-	-	-	-	3	-	-	-
		CO(GEE11012)	-	-	-	-	-	3	-	-	-	-	-	3	-	-	-

Course Code	Course Name	COs	PO1	PO2	PO3	PO4	PO5	PO6	PO7	PO8	PO9	PO10	PO11	PO12	PSO1	PSO2	PSO3
BIT11003	Life sciences	CO(BIT11003).1	3	2	2	1	2	-	1	1	1	-	1	-			
		CO(BIT11003).2	-	-	2	-	-	1	1	-	-	-	1	-			
		CO(BIT11003).3	2	1	1	2	1	1	-	1	-	1	1	-			

		CO(BIT 11003).4	1	1	2	-	1	2	-	3	2	2	1	2			
		CO(BIT 11003).5	-	1	1	-	1	2	-	2	3	3	1	2			
		CO(BIT 11003).6	-	1	1	-	1	2	-	2	3	3	1	2			
		CO(BIT 11003)	1	1	1	2	1	2	1	2	3	3	1	2			

Course Code	Course Name	COs	PO1	PO2	PO3	PO4	PO5	PO6	PO7	PO8	PO9	PO10	PO11	PO12	PSO1	PSO2	PSO3
CSE 12002	Programming Lab	CO(CSE 12002).1	3	3	2	1	1	2	1	-	3	-	-	1			
		CO(CSE 12002).2	2	2	2	3	1	1	3	-	3	-	-	1			
		CO(CSE 12002).3	3	1	3	2	1	1	3	-	1	-	-	1			
		CO(CSE 12002).4	3	3	2	2	1	3	3	-	2	-	-	3			
		CO(CSE 12002).5	3	2	1	1	2	2	1	-	2	-	2	2			
		CO(CSE 12002).6	3	2	1	1	2	2	1	-	2	-	2	2			
		CO(CSE 12002)	3	2	1	1	2	2	1	-	2	-	2	2			

Course Code	Course Name	COs	PO1	PO2	PO3	PO4	PO5	PO6	PO7	PO8	PO9	PO10	PO11	PO12	PSO1	PSO2	PSO3
GEE 12002	Electrical and Electronics Technology Lab	CO(GEE12002).1	2	2	3	2	1	2	3	-	3	-	-	1			
		CO(GEE12002).2	3	2	3	2	3	3	1	-	3	-	-	2			
		CO(GEE12002).3	3	3	2	1	3	2	2	-	2	-	-	2			
		CO(GEE12002).4	2	2	3	2	1	3	1	-	2	-	-	1			
		CO(GEE12002).5	3	2	3	1	3	2	1	-	3	-	-	1			
		CO(GEE12002).6	2	2	3	2	1	2	3	-	3	-	-	1			
		CO(GEE12002)	3	3	3	2	3	3	3	-	3	-	-	1			

Course Code	Course Name	COs	PO1	PO2	PO3	PO4	PO5	PO6	PO7	PO8	PO9	PO10	PO11	PO12	PSO1	PSO2	PSO3

MEE11002	Engineering Mechanics	CO(MEE11002).1	2				1	1	1	1		1		1		3	
		CO(MEE11002).2	2				1	1	1	1		1		1		3	
		CO(MEE11002).3	2		3		1	1	1	1		1		1		3	
		CO(MEE11002).4		3	3	2	1	1	1	1		1		1		3	
		CO(MEE11002).5			3	2	1	1	1	1		1		1		3	
		CO(MEE11002).6			3	2	1	1	1	1		1		1		3	
		CO(MEE11002)	2	3	3	2	1	1	1	1		1		1		3	

Course Code	Course Name	COs	PO1	PO2	PO3	PO4	PO5	PO6	PO7	PO8	PO9	PO10	PO11	PO12	PSO1	PSO2	PSO3
MEE12001	Engineering Workshop	CO(MEE12001).1	2				1	1	1	1		1		1	3		
		CO(MEE12001).2	2				1	1	1	1		1		1	3		
		CO(MEE12001).3	2		3		1	1	1	1		1		1	3		
		CO(MEE12001).4		3	3	2	1	1	1	1		1		1	3		
		CO(MEE12001).5			3	2	1	1	1	1		1		1	3		
		CO(MEE12001).6			3	2	1	1	1	1		1		1	3		
		CO(MEE12001)	2	3	3	2	1	1	1	1		1		1	3		

Course Code	Course Name	COs	PO1	PO2	PO3	PO4	PO5	PO6	PO7	PO8	PO9	PO10	PO11	PO12	PSO1	PSO2	PSO3
CEE12001	Engineering Drawing and CAD	CO(CEE12001).1	2				1	1	1	1		1		1	3	3	
		CO(CEE12001).2	2				1	1	1	1		1		1	3	3	
		CO(CEE12001).3	2		3		1	1	1	1		1		1	3	3	

		CO(CEE12001).4		3	3	2	1	1	1	1		1		1	3	3	
		CO(CEE12001).5			3	2	1	1	1	1		1		1	3	3	
		CO(CEE12001).6			3	2	1	1	1	1		1		1	3	3	
		CO(CEE12001)	2	3	3	2	1	1	1	1		1		1	3	3	

Course Code	Course Name	COs	PO1	PO2	PO3	PO4	PO5	PO6	PO7	PO8	PO9	PO10	PO11	PO12	PSO1	PSO2	PSO3
MTH 11502	Engineering Mathematics-II	CO(MTH11501).1	3	2	-	-	2	-	-	-	-	-	-	-	-	-	-
		CO(MTH11501).2	3	2	-	-	2	-	-	-	-	-	-	-	-	-	-
		CO(MTH11501).3	3	2	-	-	2	-	-	-	-	-	-	-	-	-	-
		CO(MTH11501).4	3	2	-	-	2	-	-	-	-	-	-	-	-	-	-
		CO(MTH11501).5	3	2	-	-	2	-	-	-	-	-	-	-	-	-	-
		CO(MTH11501).6	3	2	-	-	2	-	-	-	-	-	-	-	-	-	-
		CO(MTH11501)	3	2	-	-	2	-	-	-	-	-	-	-	-	-	-

Course Code	Course Name	COs	PO1	PO2	PO3	PO4	PO5	PO6	PO7	PO8	PO9	PO10	PO11	PO12	PSO1	PSO2	PSO3
EIC11001	Venture Ideation	CO(EIC11001).1	-	-	-	-	-	2	-	-	-	-	2	-	-	-	-
		CO(EIC11001).2	-	-	-	-	-	3	-	-	-	-	3	-	-	-	-
		CO(EIC11001).3	-	-	-	-	-	3	-	3	-	-	3	-	-	-	-
		CO(EIC11001).4	-	-	-	-	-	2	-	3	-	-	3	-	-	-	-
		CO(EIC11001).5	-	-	-	-	-	3	-	3	-	-	2	-	-	-	-
		CO(EIC11001).6	-	-	-	-	-	3	-	3	-	-	2	-	-	-	-
		CO(EIC11001)	-	-	-	-	-	3	-	3	-	-	2	-	-	-	-

Course Code	Course Name	COs	PO1	PO2	PO3	PO4	PO5	PO6	PO7	PO8	PO9	PO10	PO11	PO12	PSO1	PSO2	PSO3

MEE1103	Material Engineering & Composites	CO(MEE1103).1	2				1	1	1	1		1		1		3	
		CO(MEE1103).2	2				1	1	1	1		1		1		3	
		CO(MEE1103).3	2		3		1	1	1	1		1		1		3	
		CO(MEE1103).4		3	3	2	1	1	1	1		1		1		3	
		CO(MEE1103).5			3	2	1	1	1	1		1		1		3	
		CO(MEE1103).6			3	2	1	1	1	1		1		1		3	
		CO(MEE1103)	2	3	3	2	1	1	1	1		1		1		3	

Course Code	Course Name	COs	PO1	PO2	PO3	PO4	PO5	PO6	PO7	PO8	PO9	PO10	PO11	PO12	PSO1	PSO2	PSO3
MEE 11005	Fluid Mechanics	CO(MEE 11005).1	2				1	1	1	1		1		1			3
		CO(MEE 11005).2	2				1	1	1	1		1		1			3
		CO(MEE 11005).3	2		3		1	1	1	1		1		1			3
		CO(MEE 11005).4		3	3	2	1	1	1	1		1		1			3
		CO(MEE 11005).5			3	2	1	1	1	1		1		1			3
		CO(MEE 11005).6			3	2	1	1	1	1		1		1			3
		CO(MEE 11005)	2	3	3	2	1	1	1	1		1		1			3

Course Code	Course Name	COs	PO1	PO2	PO3	PO4	PO5	PO6	PO7	PO8	PO9	PO10	PO11	PO12	PSO1	PSO2	PSO3
MEE11006	Engineering Thermodynamics	CO(MEE11006).1	2				1	1	1	1		1		1			3
		CO(MEE11006).2	2				1	1	1	1		1		1			3
		CO(MEE11006).3	2		3		1	1	1	1		1		1			3

		CO(MEE11006).4		3	3	2	1	1	1	1		1		1			3
		CO(MEE11006).5			3	2	1	1	1	1		1		1			3
		CO(MEE11006).6			3	2	1	1	1	1		1		1			3
		CO(MEE11006)	2	3	3	2	1	1	1	1		1		1			3

Course Code	Course Name	COs	PO1	PO2	PO3	PO4	PO5	PO6	PO7	PO8	PO9	PO10	PO11	PO12	PSO1	PSO2	PSO3
MEE12025	Machine Drawing with AUTOCAD	CO(MEE12025).1	2				1	1	1	1		1		1		3	
		CO(MEE12025).2	2				1	1	1	1		1		1		3	
		CO(MEE12025).3	2		3		1	1	1	1		1		1		3	
		CO(MEE12025).4		3	3	2	1	1	1	1		1		1		3	
		CO(MEE12025).5			3	2	1	1	1	1		1		1		3	
		CO(MEE12025).6			3	2	1	1	1	1		1		1		3	
		CO(MEE12025)	2	3	3	2	1	1	1	1		1		1		3	

Course Code	Course Name	COs	PO1	PO2	PO3	PO4	PO5	PO6	PO7	PO8	PO9	PO10	PO11	PO12	PSO1	PSO2	PSO3
MEE11004	Mechanics of Solids	CO(MEE11004).1	2				1	1	1	1		1		1		3	
		CO(MEE11004).2	2				1	1	1	1		1		1		3	
		CO(MEE11004).3	2		3		1	1	1	1		1		1		3	
		CO(MEE11004).4		3	3	2	1	1	1	1		1		1		3	
		CO(MEE11004).5			3	2	1	1	1	1		1		1		3	
		CO(MEE11004).6			3	2	1	1	1	1		1		1		3	

		CO(ME E11004)	2	3	3	2	1	1	1	1		1		1		3	

Course Code	Course Name	COs	PO1	PO2	PO3	PO4	PO5	PO6	PO7	PO8	PO9	PO10	PO11	PO12	PSO1	PSO2	PSO3
ME E11015	Manufacturing Technology II	CO(ME E11015).1	2				1	1	1	1		1		1	3		
		CO(ME E11015).2	2				1	1	1	1		1		1	3		
		CO(ME E11015).3	2		3		1	1	1	1		1		1	3		
		CO(ME E11015).4		3	3	2	1	1	1	1		1		1	3		
		CO(ME E11015).5			3	2	1	1	1	1		1		1	3		
		CO(ME E11015).6			3	2	1	1	1	1		1		1	3		
		CO(ME E11015)	2	3	3	2	1	1	1	1		1		1	3		

Course Code	Course Name	COs	PO1	PO2	PO3	PO4	PO5	PO6	PO7	PO8	PO9	PO10	PO11	PO12	PSO1	PSO2	PSO3
ME E11014	Thermal Engineering	CO(ME E11014).1	2				1	1	1	1		1		1			3
		CO(ME E11014).2	2				1	1	1	1		1		1			3
		CO(ME E11014).3	2		3		1	1	1	1		1		1			3
		CO(ME E11014).4		3	3	2	1	1	1	1		1		1			3
		CO(ME E11014).5			3	2	1	1	1	1		1		1			3
		CO(ME E11014).6			3	2	1	1	1	1		1		1			3
		CO(ME E11014)	2	3	3	2	1	1	1	1		1		1			3

Course Code	Course Name	COs	PO1	PO2	PO3	PO4	PO5	PO6	PO7	PO8	PO9	PO10	PO11	PO12	PSO1	PSO2	PSO3
ME E11027	Metrology & Measurement	CO(ME E11027).1	2				1	1	1	1		1		1	3		

		CO(MEE11027).2	2				1	1	1	1		1		1	3		
		CO(MEE11027).3	2		3		1	1	1	1		1		1	3		
		CO(MEE11027).4		3	3	2	1	1	1	1		1		1	3		
		CO(MEE11027).5			3	2	1	1	1	1		1		1	3		
		CO(MEE11027).6			3	2	1	1	1	1		1		1	3		
		CO(MEE11027)	2	3	3	2	1	1	1	1		1		1	3		

Course Code	Course Name	COs	PO1	PO2	PO3	PO4	PO5	PO6	PO7	PO8	PO9	PO10	PO11	PO12	PSO1	PSO2	PSO3
MEE12007	Material Testing Lab	CO(MEE12007).1	2				1	1	1	1		1		1		3	
		CO(MEE12007).2	2				1	1	1	1		1		1		3	
		CO(MEE12007).3	2		3		1	1	1	1		1		1		3	
		CO(MEE12007).4		3	3	2	1	1	1	1		1		1		3	
		CO(MEE12007).5			3	2	1	1	1	1		1		1		3	
		CO(MEE12007).6			3	2	1	1	1	1		1		1		3	
		CO(MEE12007)	2	3	3	2	1	1	1	1		1		1		3	

Course Code	Course Name	COs	PO1	PO2	PO3	PO4	PO5	PO6	PO7	PO8	PO9	PO10	PO11	PO12	PSO1	PSO2	PSO3
MEE12036	Thermal Engineering Lab	CO(MEE12036).1	2				1	1	1	1		1		1			3
		CO(MEE12036).2	2				1	1	1	1		1		1			3
		CO(MEE12036).3	2		3		1	1	1	1		1		1			3
		CO(MEE12036).4		3	3	2	1	1	1	1		1		1			3

		CO(MEE12036).5			3	2	1	1	1	1		1		1			3
		CO(MEE12036).6			3	2	1	1	1	1		1		1			3
		CO(MEE12036)	2	3	3	2	1	1	1	1		1		1			3

Course Code	Course Name	COs	PO1	PO2	PO3	PO4	PO5	PO6	PO7	PO8	PO9	PO10	PO11	PO12	PSO1	PSO2	PSO3
MEE 11026	Heat Transfer	CO(MEE 11026).1	2				1	1	1	1		1		1			3
		CO(MEE 11026).2	2				1	1	1	1		1		1			3
		CO(MEE 11026).3	2		3		1	1	1	1		1		1			3
		CO(MEE 11026).4		3	3	2	1	1	1	1		1		1			3
		CO(MEE 11026).5			3	2	1	1	1	1		1		1			3
		CO(MEE 11026).6			3	2	1	1	1	1		1		1			3
		CO(MEE 11026)	2	3	3	2	1	1	1	1		1		1			3

Course Code	Course Name	COs	PO1	PO2	PO3	PO4	PO5	PO6	PO7	PO8	PO9	PO10	PO11	PO12	PSO1	PSO2	PSO3
MEE11010	Mechanisms & Machines	CO(MEE11010).1	2				1	1	1	1		1		1		3	
		CO(MEE11010).2	2				1	1	1	1		1		1		3	
		CO(MEE11010).3	2		3		1	1	1	1		1		1		3	
		CO(MEE11010).4		3	3	2	1	1	1	1		1		1		3	
		CO(MEE11010).5			3	2	1	1	1	1		1		1		3	
		CO(MEE11010).6			3	2	1	1	1	1		1		1		3	
		CO(MEE11010)	2	3	3	2	1	1	1	1		1		1		3	

Course Code	Course Name	COs	PO1	PO2	PO3	PO4	PO5	PO6	PO7	PO8	PO9	PO10	PO11	PO12	PSO1	PSO2	PSO3
MEE 11008	Fluid Machinery	CO(MEE 11008).1	2				1	1	1	1		1		1			3
		CO(MEE 11008).2	2				1	1	1	1		1		1			3

		CO(MEE 11008).3	2		3		1	1	1	1		1		1			3
		CO(MEE 11008).4		3	3	2	1	1	1	1		1		1			3
		CO(MEE 11008).5			3	2	1	1	1	1		1		1			3
		CO(MEE 11008).6			3	2	1	1	1	1		1		1			3
		CO(MEE 11008)	2	3	3	2	1	1	1	1		1		1			3

Course Code	Course Name	COs	PO 1	PO 2	PO 3	PO 4	PO 5	PO 6	PO 7	PO 8	PO 9	PO10	PO11	PO12	PSO1	PSO2	PSO3
	Agricultural Engineering	CO(CourseCode).1	2				1	1	1	1		1		1		3	
		CO(CourseCode).2	2				1	1	1	1		1		1		3	
		CO(CourseCode).3	2		3		1	1	1	1		1		1		3	
		CO(CourseCode).4		3	3	2	1	1	1	1		1		1		3	
		CO(CourseCode).5			3	2	1	1	1	1		1		1		3	
		CO(CourseCode).6			3	2	1	1	1	1		1		1		3	
		CO(Course Code)	2	3	3	2	1	1	1	1		1		1		3	

Course Code	Course Name	COs	PO1	PO2	PO3	PO4	PO5	PO6	PO7	PO8	PO9	PO10	PO11	PO12	PSO1	PSO2	PSO3
MEE11056	Computer Integrated Manufacturing	CO(MEE11056).1	2				1	1	1	1		1		1	3		
		CO(MEE11056).2	2				1	1	1	1		1		1	3		
		CO(MEE11056).3	2		3		1	1	1	1		1		1	3		
		CO(MEE11056).4		3	3	2	1	1	1	1		1		1	3		
		CO(MEE11056).5			3	2	1	1	1	1		1		1	3		
		CO(MEE11056).6			3	2	1	1	1	1		1		1	3		
		CO(MEE11056)	2	3	3	2	1	1	1	1		1		1	3		

Course Code	Course Name	COs	PO1	PO2	PO3	PO4	PO5	PO6	PO7	PO8	PO9	PO10	PO11	PO12	PSO1	PSO2	PSO3
ME E11018	Machine Tool Design	CO(ME E11018).1	2				1	1	1	1		1		1	3		
		CO(ME E11018).2	2				1	1	1	1		1		1	3		
		CO(ME E11018).3	2		3		1	1	1	1		1		1	3		
		CO(ME E11018).4		3	3	2	1	1	1	1		1		1	3		
		CO(ME E11018).5			3	2	1	1	1	1		1		1	3		
		CO(ME E11018).6			3	2	1	1	1	1		1		1	3		
		CO(ME E11018)	2	3	3	2	1	1	1	1		1		1	3		

Course Code	Course Name	COs	PO1	PO2	PO3	PO4	PO5	PO6	PO7	PO8	PO9	PO10	PO11	PO12	PSO1	PSO2	PSO3
ME E11048	Power Plant Engineering	CO(ME E11048).1	2				1	1	1	1		1		1			3
		CO(ME E11048).2	2				1	1	1	1		1		1			3
		CO(ME E11048).3	2		3		1	1	1	1		1		1			3
		CO(ME E11048).4		3	3	2	1	1	1	1		1		1			3
		CO(ME E11048).5			3	2	1	1	1	1		1		1			3
		CO(ME E11048).6			3	2	1	1	1	1		1		1			3
		CO(ME E11048)	2	3	3	2	1	1	1	1		1		1			3

Course Code	Course Name	COs	PO1	PO2	PO3	PO4	PO5	PO6	PO7	PO8	PO9	PO10	PO11	PO12	PSO1	PSO2	PSO3
	Additive Manufacturing	CO(CourseCode).1	2				1	1	1	1		1		1	3		

		CO(CourseCode).2	2				1	1	1	1		1		1	3		
		CO(CourseCode).3	2		3		1	1	1	1		1		1	3		
		CO(CourseCode).4		3	3	2	1	1	1	1		1		1	3		
		CO(CourseCode).5			3	2	1	1	1	1		1		1	3		
		CO(CourseCode).6			3	2	1	1	1	1		1		1	3		
		CO(Course Code)	2	3	3	2	1	1	1	1		1		1	3		

Course Code	Course Name	COs	PO1	PO2	PO3	PO4	PO5	PO6	PO7	PO8	PO9	PO10	PO11	PO12	PSO1	PSO2	PSO3
MEE 11038	Smart materials	CO(MEE 11038).1	2				1	1	1	1		1		1		3	
		CO(MEE 11038).2	2				1	1	1	1		1		1		3	
		CO(MEE 11038).3	2		3		1	1	1	1		1		1		3	
		CO(MEE 11038).4		3	3	2	1	1	1	1		1		1		3	
		CO(MEE 11038).5			3	2	1	1	1	1		1		1		3	
		CO(MEE 11038).6			3	2	1	1	1	1		1		1		3	
		CO(MEE 11038)	2	3	3	2	1	1	1	1		1		1		3	

Course Code	Course Name	COs	PO1	PO2	PO3	PO4	PO5	PO6	PO7	PO8	PO9	PO10	PO11	PO12	PSO1	PSO2	PSO3
MEE12034	Heat Transfer Lab	CO(MEE12034).1	2				1	1	1	1		1		1			3
		CO(MEE12034).2	2				1	1	1	1		1		1			3
		CO(MEE12034).3	2		3		1	1	1	1		1		1			3
		CO(MEE12034).4		3	3	2	1	1	1	1		1		1			3
		CO(MEE12034).5			3	2	1	1	1	1		1		1			3
		CO(MEE12034).6			3	2	1	1	1	1		1		1			3
		CO(MEE12034)	2	3	3	2	1	1	1	1		1		1			3

Course Code	Course Name	COs	PO 1	PO 2	PO 3	PO 4	PO 5	PO 6	PO 7	PO 8	PO 9	PO 10	PO 11	PO 12	PSO 1	PSO 2	PSO 3
MEE12012	Fluid mechanics & Hydraulics Lab	CO(MEE12012).1	2				1	1	1	1		1		1			3
		CO(MEE12012).2	2				1	1	1	1		1		1			3
		CO(MEE12012).3	2		3		1	1	1	1		1		1			3
		CO(MEE12012).4		3	3	2	1	1	1	1		1		1			3
		CO(MEE12012).5			3	2	1	1	1	1		1		1			3
		CO(MEE12012).6			3	2	1	1	1	1		1		1			3
		CO(MEE12012)	2	3	3	2	1	1	1	1		1		1			3

Course Code	Course Name	COs	PO 1	PO 2	PO 3	PO 4	PO 5	PO 6	PO 7	PO 8	PO 9	PO 10	PO 11	PO 12	PSO 1	PSO 2	PSO 3
MEE12023	Manufacturing Technology -II Lab	CO(MEE12023).1	2				1	1	1	1		1		1	3		
		CO(MEE12023).2	2				1	1	1	1		1		1	3		
		CO(MEE12023).3	2		3		1	1	1	1		1		1	3		
		CO(MEE12023).4		3	3	2	1	1	1	1		1		1	3		
		CO(MEE12023).5			3	2	1	1	1	1		1		1	3		
		CO(MEE12023).6			3	2	1	1	1	1		1		1	3		
		CO(MEE12023)	2	3	3	2	1	1	1	1		1		1	3		

Course Code	Course Name	COs	PO 1	PO 2	PO 3	PO 4	PO 5	PO 6	PO 7	PO 8	PO 9	PO 10	PO 11	PO 12	PSO 1	PSO 2	PSO 3
MEE12023	Automatic Controls	CO(MEE12023).1	2				1	1	1	1		1		1		3	
		CO(MEE12023).2	2				1	1	1	1		1		1		3	
		CO(MEE12023).3	2		3		1	1	1	1		1		1		3	
		CO(MEE12023).4		3	3	2	1	1	1	1		1		1		3	
		CO(MEE12023).5			3	2	1	1	1	1		1		1		3	
		CO(MEE12023).6			3	2	1	1	1	1		1		1		3	
		CO(MEE12023)	2	3	3	2	1	1	1	1		1		1		3	

Course Code	Course Name	COs	PO 1	PO 2	PO 3	PO 4	PO 5	PO 6	PO 7	PO 8	PO 9	PO10	PO11	PO12	PSO 1	PSO 2	PSO 3
MEE11011	Design of Mechanical Systems	CO(MEE11011).1	2				1	1	1	1		1		1		3	
		CO(MEE11011).2	2				1	1	1	1		1		1		3	
		CO(MEE11011).3	2		3		1	1	1	1		1		1		3	
		CO(MEE11011).4		3	3	2	1	1	1	1		1		1		3	
		CO(MEE11011).5			3	2	1	1	1	1		1		1		3	
		CO(MEE11011).6			3	2	1	1	1	1		1		1		3	
		CO(MEE11011)	2	3	3	2	1	1	1	1		1		1		3	

Course Code	Course Name	COs	PO 1	PO 2	PO 3	PO 4	PO 5	PO 6	PO 7	PO 8	PO 9	PO10	PO11	PO12	PSO 1	PSO 2	PSO 3
MEE11028	IC Engines & Gas Turbines	CO(MEE11028).1	2				1	1	1	1		1		1			3
		CO(MEE11028).2	2				1	1	1	1		1		1			3
		CO(MEE11028).3	2		3		1	1	1	1		1		1			3
		CO(MEE11028).4		3	3	2	1	1	1	1		1		1			3
		CO(MEE11028).5			3	2	1	1	1	1		1		1			3
		CO(MEE11028).6			3	2	1	1	1	1		1		1			3
		CO(MEE11028)	2	3	3	2	1	1	1	1		1		1			3

Course Code	Course Name	COs	PO1	PO2	PO3	PO4	PO5	PO6	PO7	PO8	PO9	PO10	PO11	PO12	PSO1	PSO2	PSO3
MEE11036	Mechanical Vibration & Control	CO(MEE11036).1	2				1	1	1	1		1		1		3	
		CO(MEE11036).2	2				1	1	1	1		1		1		3	
		CO(MEE11036).3	2		3		1	1	1	1		1		1		3	
		CO(MEE11036).4		3	3	2	1	1	1	1		1		1		3	

		CO(MEE11036).5			3	2	1	1	1	1		1		1		3	
		CO(MEE11036).6			3	2	1	1	1	1		1		1		3	
		CO(MEE11036)	2	3	3	2	1	1	1	1		1		1		3	

Course Code	Course Name	COs	PO1	PO2	PO3	PO4	PO5	PO6	PO7	PO8	PO9	PO10	PO11	PO12	PSO1	PSO2	PSO3
MEE11063	Refrigeration and Air Conditioning	CO(MEE11063).1	2				1	1	1	1		1		1			3
		CO(MEE11063).2	2				1	1	1	1		1		1			3
		CO(MEE11063).3	2		3		1	1	1	1		1		1			3
		CO(MEE11063).4		3	3	2	1	1	1	1		1		1			3
		CO(MEE11063).5			3	2	1	1	1	1		1		1			3
		CO(MEE11063).6			3	2	1	1	1	1		1		1			3
		CO(MEE11063)	2	3	3	2	1	1	1	1		1		1			3

`

Course Code	Course Name	COs	PO1	PO2	PO3	PO4	PO5	PO6	PO7	PO8	PO9	PO10	PO11	PO12	PSO1	PSO2	PSO3
	Industrial Automation	CO(CourseCode).1	2				1	1	1	1		1		1	3		
		CO(CourseCode).2	2				1	1	1	1		1		1	3		
		CO(CourseCode).3	2		3		1	1	1	1		1		1	3		
		CO(CourseCode).4		3	3	2	1	1	1	1		1		1	3		
		CO(CourseCode).5			3	2	1	1	1	1		1		1	3		
		CO(CourseCode).6			3	2	1	1	1	1		1		1	3		
		CO(Course Code)	2	3	3	2	1	1	1	1		1		1	3		

Course Code	Course Name	COs	PO1	PO2	PO3	PO4	PO5	PO6	PO7	PO8	PO9	PO10	PO11	PO12	PSO1	PSO2	PSO3
MEE12024	Mechanisms & Machines Lab	CO(MEE12024).1	2				1	1	1	1		1		1		3	
		CO(MEE12024).2	2				1	1	1	1		1		1		3	

		CO(MEE12024).3	2		3		1	1	1	1		1		1		3	
		CO(MEE12024).4		3	3	2	1	1	1	1		1		1		3	
		CO(MEE12024).5			3	2	1	1	1	1		1		1		3	
		CO(MEE12024).6			3	2	1	1	1	1		1		1		3	
		CO(MEE12024)	2	3	3	2	1	1	1	1		1		1		3	

Course Code	Course Name	COs	PO 1	PO 2	PO 3	PO 4	PO 5	PO 6	PO 7	PO 8	PO 9	PO10	PO11	PO12	PSO1	PSO2	PSO3
MEE12031	Refrigeration and Air Conditioning Lab	CO(MEE12031).1	2				1	1	1	1		1		1			3
		CO(MEE12031).2	2				1	1	1	1		1		1			3
		CO(MEE12031).3	2		3		1	1	1	1		1		1			3
		CO(MEE12031).4		3	3	2	1	1	1	1		1		1			3
		CO(MEE12031).5			3	2	1	1	1	1		1		1			3
		CO(MEE12031).6			3	2	1	1	1	1		1		1			3
		CO(MEE1203)	2	3	3	2	1	1	1	1		1		1			3

Course Code	Course Name	COs	PO 1	PO 2	PO 3	PO 4	PO 5	PO 6	PO 7	PO 8	PO 9	PO10	PO11	PO12	PSO1	PSO2	PSO3
	Industrial Automation Lab	CO(CourseCode).1	2				1	1	1	1		1		1	3		
		CO(CourseCode).2	2				1	1	1	1		1		1	3		
		CO(CourseCode).3	2		3		1	1	1	1		1		1	3		
		CO(CourseCode).4		3	3	2	1	1	1	1		1		1	3		
		CO(CourseCode).5			3	2	1	1	1	1		1		1	3		
		CO(CourseCode).6			3	2	1	1	1	1		1		1	3		
		CO(Course Code)	2	3	3	2	1	1	1	1		1		1	3		

Course Code	Course Name	COs	PO 1	PO 2	PO 3	PO 4	PO 5	PO 6	PO 7	PO 8	PO 9	PO10	PO11	PO12	PSO1	PSO2	PSO3
MEE12029	Internal Combustio	CO(MEE12029).1	2				1	1	1	1		1		1			3

	n Engines Lab	CO(MEE12029) .2	2				1	1	1	1		1		1			3
		CO(MEE12029) .3	2		3		1	1	1	1		1		1			3
		CO(MEE12029) .4		3	3	2	1	1	1	1		1		1			3
		CO(MEE12029) .5			3	2	1	1	1	1		1		1			3
		CO(MEE12029) .6			3	2	1	1	1	1		1		1			3
		CO(MEE12029)	2	3	3	2	1	1	1	1		1		1			3

Course Code	Course Name	COs	PO 1	PO 2	PO 3	PO 4	PO 5	PO 6	PO 7	PO 8	PO 9	PO10	PO11	PO12	PSO1	PSO2	PSO3
MEE11069	Automobile Engineering	CO(MEE11069) .1	2				1	1	1	1		1		1		3	
		CO(MEE11069) .2	2				1	1	1	1		1		1		3	
		CO(MEE11069) .3	2		3		1	1	1	1		1		1		3	
		CO (MEE11069).4		3	3	2	1	1	1	1		1		1		3	
		CO(MEE11069) .5			3	2	1	1	1	1		1		1		3	
		CO(MEE11069) .6			3	2	1	1	1	1		1		1		3	
		CO(MEE11069)	2	3	3	2	1	1	1	1		1		1		3	

Course Code	Course Name	COs	PO 1	PO 2	PO 3	PO 4	PO 5	PO 6	PO 7	PO 8	PO 9	PO10	PO11	PO12	PSO1	PSO2	PSO3
MEE11037	Robotics	CO(MEE11037) .1	2				1	1	1	1		1		1		3	
		CO(MEE11037) .2	2				1	1	1	1		1		1		3	
		CO(MEE11037) .3	2		3		1	1	1	1		1		1		3	
		CO(MEE11037) .4		3	3	2	1	1	1	1		1		1		3	
		CO(MEE11037) .5			3	2	1	1	1	1		1		1		3	
		CO(MEE11037) .6			3	2	1	1	1	1		1		1		3	
		CO(MEE11037)	2	3	3	2	1	1	1	1		1		1		3	

Course Code	Course Name	COs	PO 1	PO 2	PO 3	PO 4	PO 5	PO 6	PO 7	PO 8	PO 9	PO10	PO11	PO12	PSO1	PSO2	PSO3
	Biomedical Design	CO(MEE11040) .1	2				1	1	1	1		1		1		3	

MEE11040		CO(MEE11040).2	2				1	1	1	1		1		1		3	
		CO(MEE11040).3	2		3		1	1	1	1		1		1		3	
		CO(MEE11040).4		3	3	2	1	1	1	1		1		1		3	
		CO(MEE11040).5			3	2	1	1	1	1		1		1		3	
		CO(MEE11040).6			3	2	1	1	1	1		1		1		3	
		CO(MEE11040)	2	3	3	2	1	1	1	1		1		1		3	

Course Code	Course Name	COs	PO1	PO2	PO3	PO4	PO5	PO6	PO7	PO8	PO9	PO10	PO11	PO12	PSO1	PSO2	PSO3
MEE12055	Computational Fluid Dynamics Lab	CO(MEE12055).1	2				1	1	1	1		1		1			3
		CO(MEE12055).2	2				1	1	1	1		1		1			3
		CO(MEE12055).3	2		3		1	1	1	1		1		1			3
		CO(MEE12055).4		3	3	2	1	1	1	1		1		1			3
		CO(MEE12055).5			3	2	1	1	1	1		1		1			3
		CO(MEE12055).6			3	2	1	1	1	1		1		1			3
		CO(MEE12055)	2	3	3	2	1	1	1	1		1		1			3

Course Code	Course Name	COs	PO1	PO2	PO3	PO4	PO5	PO6	PO7	PO8	PO9	PO10	PO11	PO12	PSO1	PSO2	PSO3
	Vibration & Control	CO().1	2				1	1	1	1		1		1		3	
		CO().2	2				1	1	1	1		1		1		3	
		CO().3	2		3		1	1	1	1		1		1		3	
		CO().4		3	3	2	1	1	1	1		1		1		3	
		CO().5			3	2	1	1	1	1		1		1		3	
		CO().6			3	2	1	1	1	1		1		1		3	
		CO()	2	3	3	2	1	1	1	1		1		1		3	

Course Code	Course Name	COs	PO1	PO2	PO3	PO4	PO5	PO6	PO7	PO8	PO9	PO10	PO11	PO12	PSO1	PSO2	PSO3
	Summer Internship	CO(MEE14056).1	2	2									2	3	3	3	3

MEE14056		CO(MEE14056).2		2	2	2							2	3	3	3	3
		CO(MEE14056).3		2	2	2							2	3	3	3	3
		CO(MEE14056).4			2	2	2	2	2				2	3	3	3	3
		CO(MEE14056).5			2	2	2	2	2				2	3	3	3	3
		CO(MEE14056).6	2	2	2	2	2	2	2	2	2	2	2	3	3	3	3
		CO(MEE14056)	2	3	3	3	2	2	2	2	2	2	2	3	3	3	3

Course Code	Course Name	COs	PO 1	PO 2	PO 3	PO 4	PO 5	PO 6	PO 7	PO 8	PO 9	PO10	PO11	PO12	PSO1	PSO2	PSO3
MEE14057	Minor Project	CO(MEE14057).1	2	2									2	3	3	3	3
		CO(MEE14057).2		2	2	2							2	3	3	3	3
		CO(MEE14057).3		2	2	2							2	3	3	3	3
		CO(MEE14057).4			2	2	2	2	2				2	3	3	3	3
		CO(MEE14057).5			2	2	2	2	2				2	3	3	3	3
		CO(MEE14057).6	2	2	2	2	2	2	2	2	2	2	2	3	3	3	3
		CO(MEE14057)	2	3	3	3	2	2	2	2	2	2	2	3	3	3	3

Course Code	Course Name	COs	PO 1	PO 2	PO 3	PO 4	PO 5	PO 6	PO 7	PO 8	PO 9	PO10	PO11	PO12	PSO1	PSO2	PSO3
MEE14060	Industry Work Experience / SIRE* / Major Project	CO(MEE14060).1	2	2									2	3	3	3	3
		CO(MEE14060).2		2	2	2							2	3	3	3	3
		CO(MEE14060).3		2	2	2							2	3	3	3	3
		CO(MEE14060).4			2	2	2	2	2				2	3	3	3	3
		CO(MEE14060).5			2	2	2	2	2				2	3	3	3	3
		CO(MEE14060).6	2	2	2	2	2	2	2	2	2	2	2	3	3	3	3
		CO(MEE1406)	2	3	3	3	2	2	2	2	2	2	2	3	3	3	3

Course Code	Course Name	COs	PO1	PO2	PO3	PO4	PO5	PO6	PO7	PO8	PO9	PO10	PO11	PO12	PSO1	PSO2	PSO3
	MEMS	CO( ).1	2				1	1	1	1		1		1		3	
		CO( ).2	2				1	1	1	1		1		1		3	
		CO( ).3	2		3		1	1	1	1		1		1		3	
		CO( ).4		3	3	2	1	1	1	1		1		1		3	
		CO( ).5			3	2	1	1	1	1		1		1		3	
		CO( ).6			3	2	1	1	1	1		1		1		3	
		CO( )	2	3	3	2	1	1	1	1		1		1		3	